ARCTIC CAT®

Illustrated Parts Manual Supplement

2005

Firecat™ Limited Editions

- Team Arctic
- Black Widow
- Retro
- Joker

NOTE: This supplement is designed to be used with the following Illustrated Parts Manuals: Firecat 600 EFI (p/n 2257-125) - Firecat 600 EFI Sno Pro (p/n 2257-126) - Firecat 700 (p/n 2257-128) - Firecat 700 Sno Pro (p/n 2257-129) - Firecat 700 EFI (p/n 2257-118) or Firecat 700 EFI Sno Pro (p/n 2257-119).

Firecat Limited Edition Model Numbers

600 EFI Team Arctic
Green - S2005F6DTEUSG

600 EFI Sno Pro Team Arctic
Green - S2005F6DAEUSG

700 Team Arctic
Green - S2005F7FTCUSG

700 Sno Pro Team Arctic
Green - S2005F7FACUSG

700 EFI Team Arctic
Green - S2005F7FTEUSG

700 EFI Sno Pro Team Arctic
Green - S2005F7FAEUSG

600 EFI Retro
Black - S2005F6DREUSB

600 EFI Sno Pro Retro
Black - S2005F6DRPUSB

700 Retro
Black - S2005F7FRCUSB

700 Sno Pro Retro
Black - S2005F7FRSUSB

700 EFI Retro
Black - S2005F7FREUSB

700 EFI Sno Pro Retro
Black - S2005F7FRPUSB

600 EFI Black Widow
Black - S2005F6DBEUSB

600 EFI Sno Pro Black Widow
Black - S2005F6DBPUSB

700 Black Widow
Black - S2005F7FBCUSB

700 Sno Pro Black Widow
Black - S2005F7FBSUSB

700 EFI Black Widow
Black - S2005F7FBEUSB

700 EFI Sno Pro Black Widow
Black - S2005F7FBPUSB

600 EFI Joker
Black - S2005F6DJEUSB
Red - S2005F6DJEUSR

600 EFI Sno Pro Joker
Black - S2005F6DJPUSB
Red - S2005F6DJPUSR

700 Joker
Black - S2005F7FJCUSB
Red - S2005F7FJCUSR

700 Sno Pro Joker
Black - S2005F7FJSUSB
Red - S2005F7FJSUSR

700 EFI Joker
Black - S2005F7FJEUSB
Red - S2005F7FJEUSR

700 EFI Sno Pro Joker
Black - S2005F7FJPUSB
Red - S2005F7FJPUSR

TABLE OF CONTENTS

2005 Firecat Limited Editions

■NOTE: Use this Table of Contents to access Limited Edition information. Information not listed in this Table of Contents should be accessed from the appropriate Illustrated Parts Manual designated on the cover of this supplement.

FRONT FRAME AND STEERING COMPONENTS 1
TUNNEL, COOLING, AND SNOWFLAP. 2
FRONT SUSPENSION (Team Arctic) 3
HOOD AND WINDSHIELD ASSEMBLY (600 EFI Team Arctic) 4
HOOD AND WINDSHIELD ASSEMBLY (700 Team Arctic) 5
HOOD AND WINDSHIELD ASSEMBLY (700 EFI Team Arctic) 6
SEAT, BELLY PAN, AND DECALS (Team Arctic) 7
FRONT SUSPENSION (Retro) 8
HOOD AND WINDSHIELD ASSEMBLY (600 EFI Retro) 9
HOOD AND WINDSHIELD ASSEMBLY (700 Retro) 10
HOOD AND WINDSHIELD ASSEMBLY (700 EFI Retro) 11
SEAT, BELLY PAN, AND DECALS (600 EFI Retro). 12
SEAT, BELLY PAN, AND DECALS (700 Retro/700 EFI Retro) 13
FRONT SUSPENSION (Black Widow) 14
HOOD AND WINDSHIELD ASSEMBLY (600 EFI Black Widow) 15
HOOD AND WINDSHIELD ASSEMBLY (700 Black Widow) 16
HOOD AND WINDSHIELD ASSEMBLY (700 EFI Black Widow) 17
SEAT, BELLY PAN, AND DECALS (Black Widow) 18
SLIDE RAILS (Black Widow/Joker). 19
FRONT SUSPENSION (Joker) 20
HOOD AND WINDSHIELD ASSEMBLY (600 EFI Joker) 21
HOOD AND WINDSHIELD ASSEMBLY (700 Joker) 22
HOOD AND WINDSHIELD ASSEMBLY (700 EFI Joker) 23
SEAT, BELLY PAN, AND DECALS (Joker) 24

■ NOTE: The illustrations used in this Parts Manual Supplement are for reference to replacement part numbers only and are not to be used for assembly. For assembly procedures, use an Arctic Cat Service Manual. Underlined part numbers are new for the 2005 model year.

2004 Arctic Cat Inc.
®™ Trademarks of Arctic Cat Inc., Thief River Falls, MN 56701

Printed September 2004

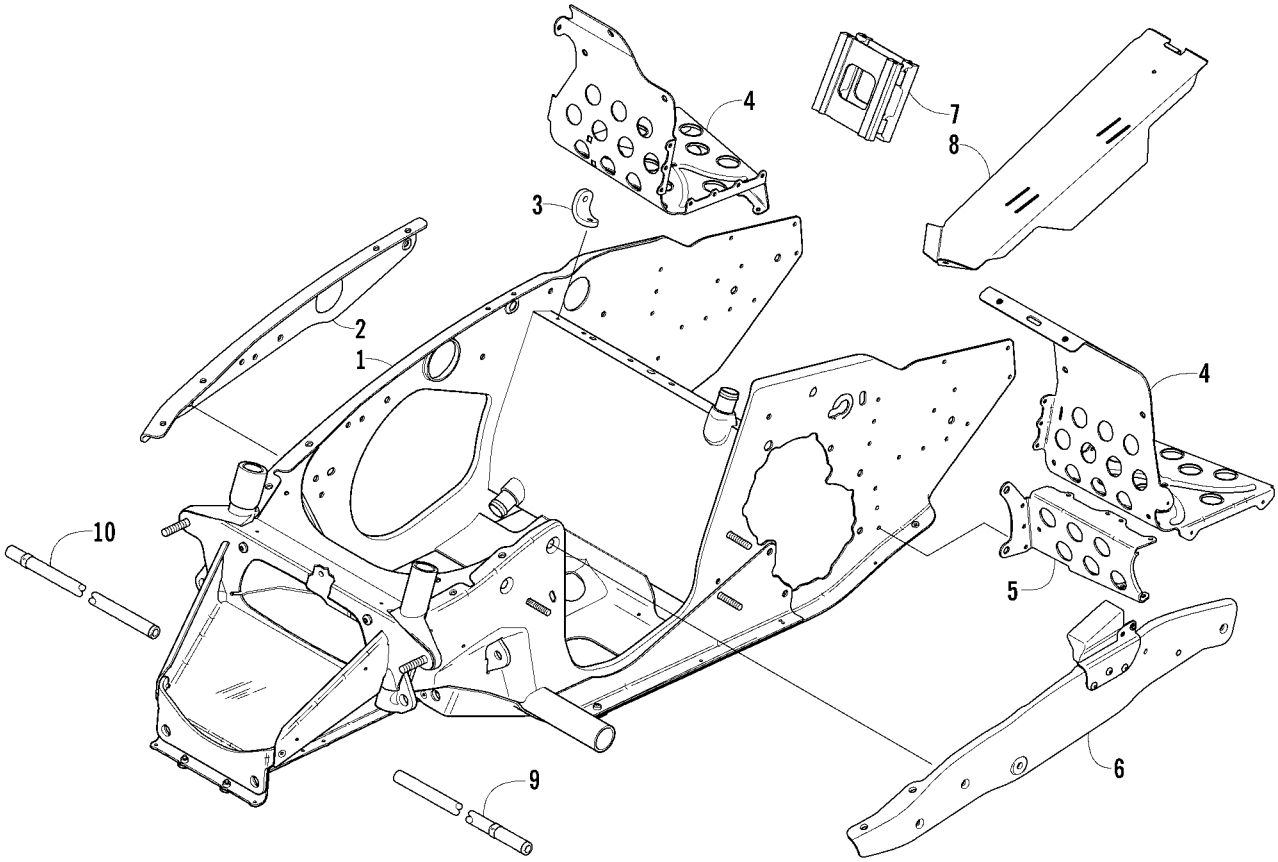

FRONT FRAME AND STEERING COMPONENTS

0740-035

Ref.	Part No.	Qty.	Description	Ref.	Part No.	Qty.	Description
1	0707-990	1	Chassis - Assembly	6	2706-818	1	Brace, Side Plate - Left
2	2706-806	1	Brace, Side Plate - Right	7	0705-958	1	Block, Riser
3	3706-018	2	Support, Side Plate	8	0707-799	1	Guard, Belt
4	3706-020	1	Footrest - Right	9	0605-681	2	Tie Rod - Spindle
	3706-021	1	Footrest - Left	10	0605-682	1	Tie Rod - Center
5	3706-022	1	Bracket, Support - Footrest - Right				
	3706-023	1	Bracket, Support - Footrest - Left				

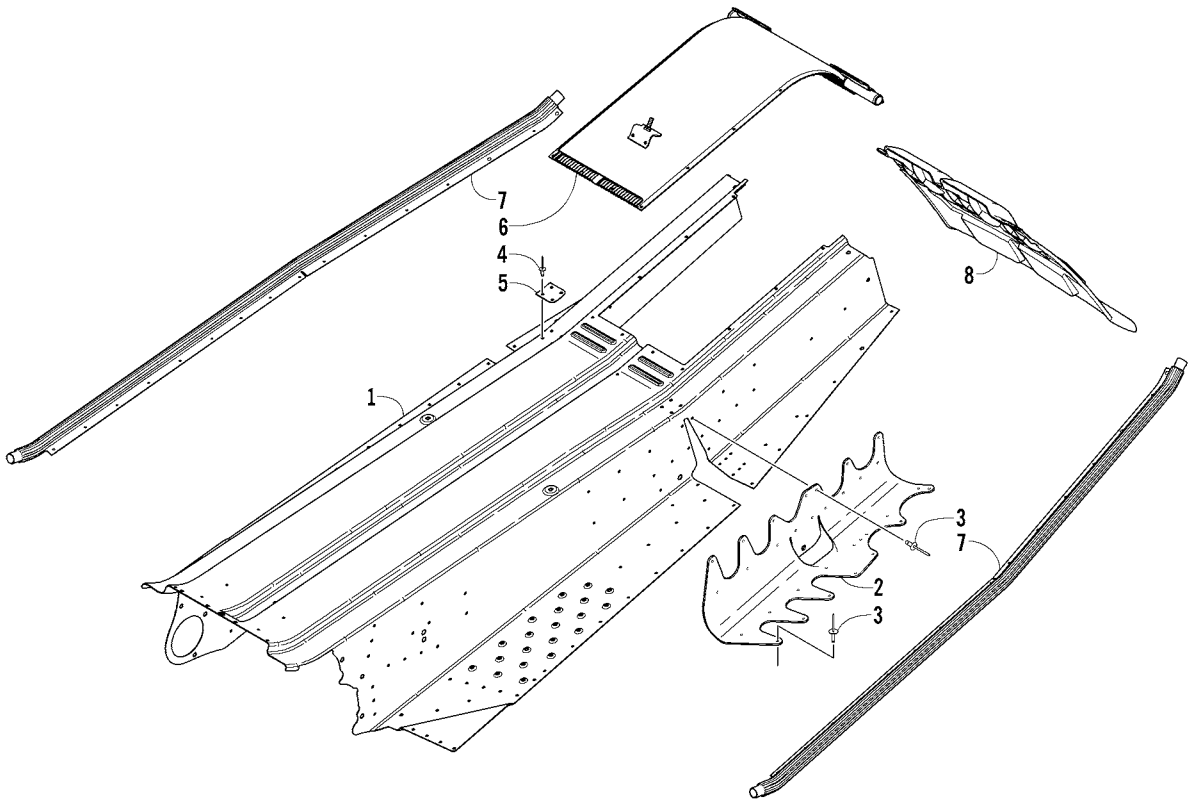

TUNNEL, COOLING, AND SNOWFLAP

0740-036 *Optional

Ref.	Part No.	Qty.	Description	Ref.	Part No.	Qty.	Description
1	1718-823	1	Tunnel Assembly (inc. 2-5)	4	8060-706	8	● Rivet
2	3706-026	1	● Bracket, Suspension Mounting - Right - Rear	5	2706-903	2	● Bracket, Support
				6	3706-005	1	Heat Exchanger, Rear
	3706-027	1	● Bracket, Suspension Mounting - Left - Rear	7	3706-016	1	Heat Exchanger - Right Tube
					3706-017	1	Heat Exchanger - Left Tube
3	0623-072	AR	● Rivet	8	3606-603	1	Snowflap w/Decals
	0123-418	AR	● Rivet		3606-333	1	Snowflap w/Decals (Black Widow)
	0623-806	AR	● Rivet				
	8060-506	AR	● Rivet*				

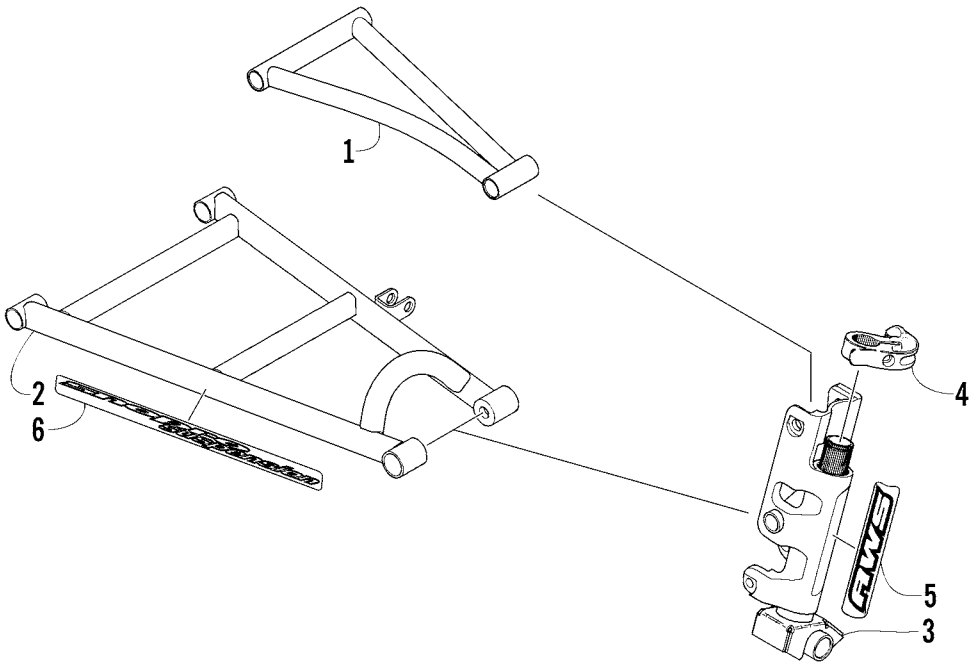

FRONT SUSPENSION (Team Arctic)

0740-038

Ref.	Part No.	Qty.	Description	Ref.	Part No.	Qty.	Description
1	1703-732	2	A-Arm, Upper - Green	4	1703-664	2	● Arm, Steering
2	1703-738	1	A-Arm, Lower - Right - Green	5	5611-934	1	Decal, Spindle - Right
	1703-739	1	A-Arm, Lower - Left - Green		5611-935	1	Decal, Spindle - Left
3	1703-730	1	Spindle, Steering - Right - Green (inc. 4)	6	5611-938	2	Decal, A-Arm
	1703-731	1	Spindle, Steering - Left - Green (inc. 4)				

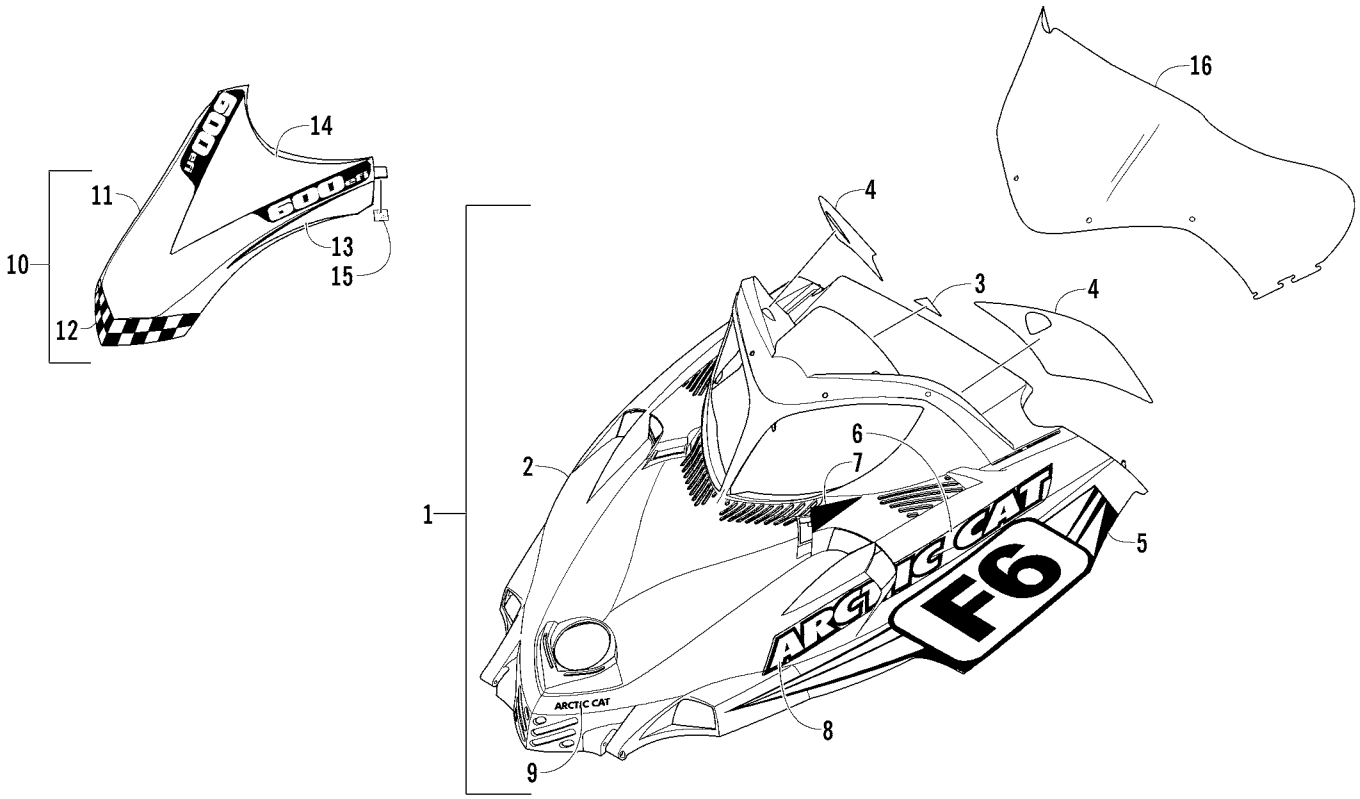

HOOD AND WINDSHIELD ASSEMBLY (600 EFI Team Arctic)

0739-937

Ref.	Part No.	Qty.	Description	Ref.	Part No.	Qty.	Description
1	1718-640	1	Hood w/Decals - Green (inc. 2-9)	8	6611-312	1	● Decal, Hood - Vent - Front - Right
2	1718-666	1	● Hood w/o Decals - Green		6611-313	1	● Decal, Hood - Vent - Front - Left
3	3611-611	1	● Decal, “Made In U.S.A.” - Domed	9	3611-187	1	● Decal, “Arctic Cat”
4	6611-306	1	● Decal, Console - Right	10	1718-697	1	Cover, Hood - Black (inc. 11-15)
	6611-029	1	● Decal, Console - Left	11	2706-031	1	● Cover, Hood w/o Decals
5	6611-316	1	● Decal, Hood - Lower Right	12	5611-693	1	● Decal, Cover - Front
	6611-317	1	● Decal, Hood - Lower Left	13	5611-930	1	● Decal, Cover - Side - Right
6	5611-936	1	● Decal, Hood - Vent - Rear - Right		5611-931	1	● Decal, Cover - Side - Left
	5611-937	1	● Decal, Hood - Vent - Rear - Left	14	6611-303	1	● Decal, Cover - Crest
7	6611-314	1	● Decal, Hood - Upper Right	15	2606-007	1	● Foil, Protective
	6611-315	1	● Decal, Hood - Upper Left	16	3606-250	1	Windshield

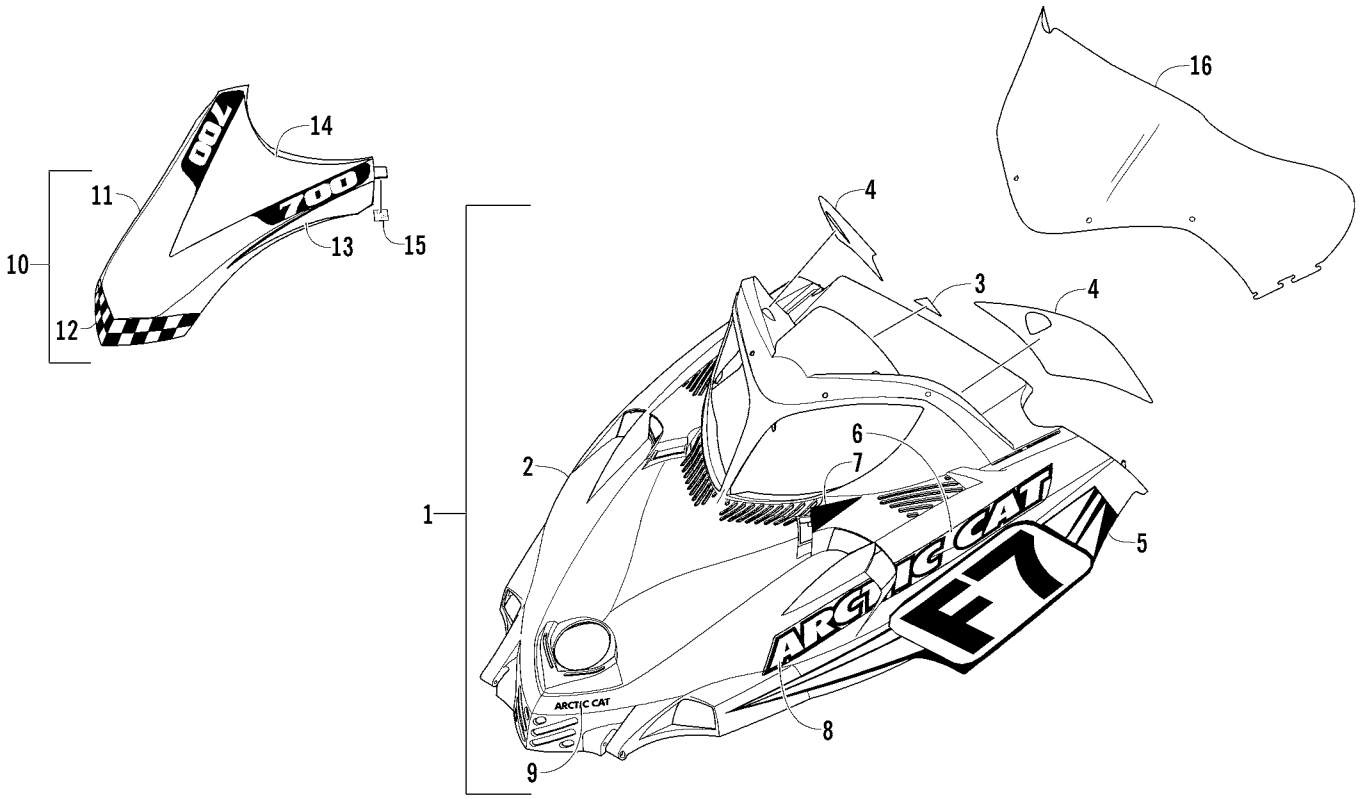

HOOD AND WINDSHIELD ASSEMBLY (700 Team Arctic)

0740-039

Ref.	Part No.	Qty.	Description	Ref.	Part No.	Qty.	Description
1	1718-650	1	Hood w/Decals - Green (inc. 2-9)	8	6611-312	1	● Decal, Hood - Vent - Front - Right
2	1718-666	1	● Hood w/o Decals - Green		6611-313	1	● Decal, Hood - Vent - Front - Left
3	3611-611	1	● Decal, “Made In U.S.A.” - Domed	9	3611-187	1	● Decal, “Arctic Cat”
4	6611-306	1	● Decal, Console - Right	10	1718-698	1	Cover, Hood - Black (inc. 11-15)
	6611-029	1	● Decal, Console - Left	11	2706-031	1	● Cover, Hood w/o Decals
5	6611-318	1	● Decal, Hood - Lower Right	12	5611-693	1	● Decal, Cover - Front
	6611-319	1	● Decal, Hood - Lower Left	13	5611-930	1	● Decal, Cover - Side - Right
6	5611-936	1	● Decal, Hood - Vent - Rear - Right		5611-931	1	● Decal, Cover - Side - Left
	5611-937	1	● Decal, Hood - Vent - Rear - Left	14	6611-304	1	● Decal, Cover - Crest
7	6611-314	1	● Decal, Hood - Upper Right	15	2606-007	1	● Foil, Protective
	6611-315	1	● Decal, Hood - Upper Left	16	3606-250	1	Windshield

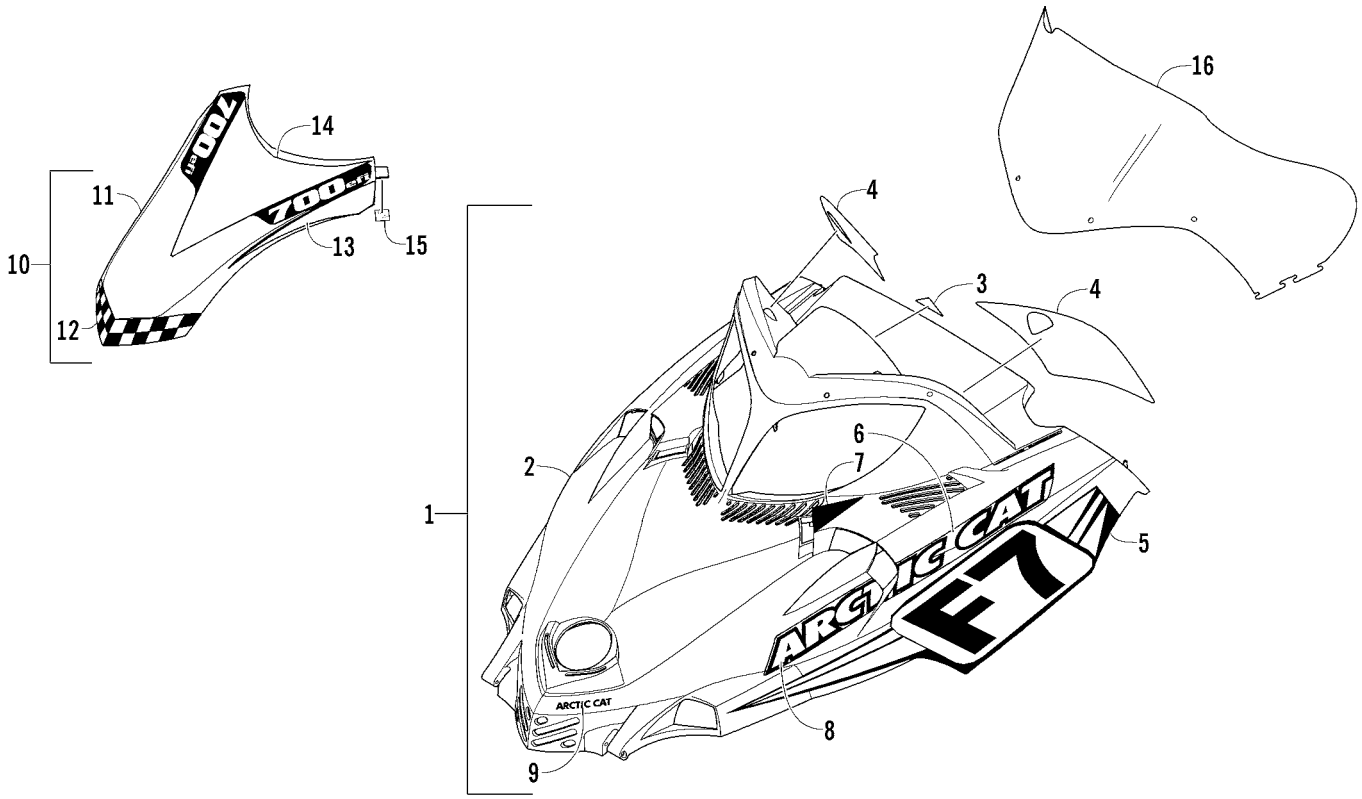

HOOD AND WINDSHIELD ASSEMBLY (700 EFI Team Arctic)

0740-040

Ref.	Part No.	Qty.	Description	Ref.	Part No.	Qty.	Description
1	1718-650	1	Hood w/Decals - Green (inc. 2-9)	8	6611-312	1	● Decal, Hood - Vent - Front - Right
2	1718-666	1	● Hood w/o Decals - Green		6611-313	1	● Decal, Hood - Vent - Front - Left
3	3611-611	1	● Decal, “Made In U.S.A.” - Domed	9	3611-187	1	● Decal, “Arctic Cat”
4	6611-306	1	● Decal, Console - Right	10	1718-699	1	Cover, Hood - Black (inc. 11-15)
	6611-029	1	● Decal, Console - Left	11	2706-031	1	● Cover, Hood w/o Decals
5	6611-318	1	● Decal, Hood - Lower Right	12	5611-693	1	● Decal, Cover - Front
	6611-319	1	● Decal, Hood - Lower Left	13	5611-930	1	● Decal, Cover - Side - Right
6	5611-936	1	● Decal, Hood - Vent - Rear - Right		5611-931	1	● Decal, Cover - Side - Left
	5611-937	1	● Decal, Hood - Vent - Rear - Left	14	6611-305	1	● Decal, Cover - Crest
7	6611-314	1	● Decal, Hood - Upper Right	15	2606-007	1	● Foil, Protective
	6611-315	1	● Decal, Hood - Upper Left	16	3606-250	1	Windshield

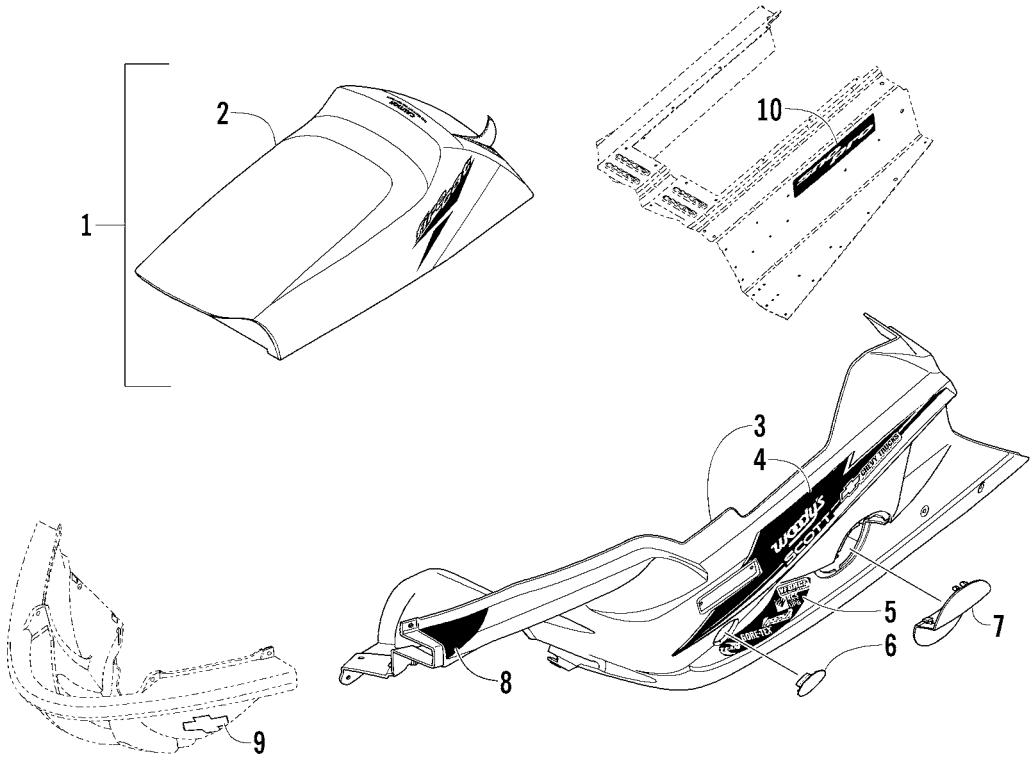

SEAT, BELLY PAN, AND DECALS (Team Arctic)

0740-048

Ref.	Part No.	Qty.	Description	Ref.	Part No.	Qty.	Description
1	7998-191	1	Complete Seat Assembly (inc. 2)	6	2606-650	1	Panel, Access - Drive Clutch
2	2706-750	1	● Cover, Seat	7	3606-912	1	Panel, Access - Driven Clutch
3	2606-646	1	Belly Pan - Right - Black	8	5611-942	1	Decal, Belly Pan - Front - Right
	3606-913	1	Belly Pan - Left - Black		5611-943	1	Decal, Belly Pan - Front - Left
4	6611-310	1	Decal, Belly Pan - Upper Right	9	5611-917	1	Decal, Front Bumper
	6611-311	1	Decal, Belly Pan - Upper Left	10	6611-307	1	Decal, Tunnel (Sno Pro)
5	6611-308	1	Decal, Belly Pan - Lower Right				
	6611-654	1	Decal, Belly Pan - Lower Left - Front				
	6611-655	1	Decal, Belly Pan - Lower Left - Rear				

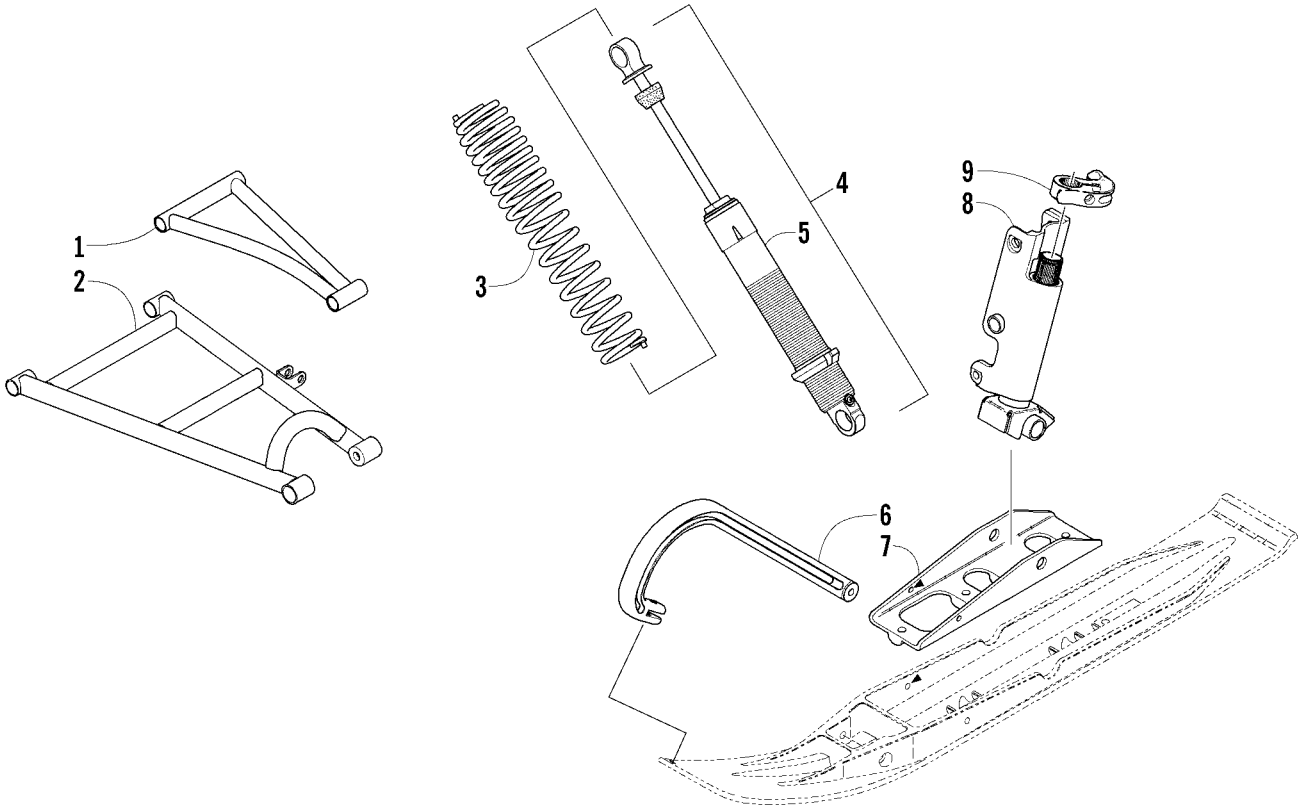

FRONT SUSPENSION (Retro)

0740-049

Ref.	Part No.	Qty.	Description	Ref.	Part No.	Qty.	Description
1	1703-426	2	A-Arm, Upper - Black	6	0603-624	2	Handle, Plastic - Black
2	1703-734	1	A-Arm, Lower - Right - Black	7	1703-503	2	Saddle, Ski - Black
	1703-735	1	A-Arm, Lower - Left - Black	8	1703-724	1	Spindle, Steering - Right - Black (inc. 9)
3	1703-773	2	Spring - Green (STD)		1703-725	1	Spindle, Steering - Left - Black (inc. 9)
4	1703-796	2	Shock, Ski (inc. 5) (STD)	9	1703-659	2	● Arm, Steering
5	2603-281	2	● Body, Shock (STD)				

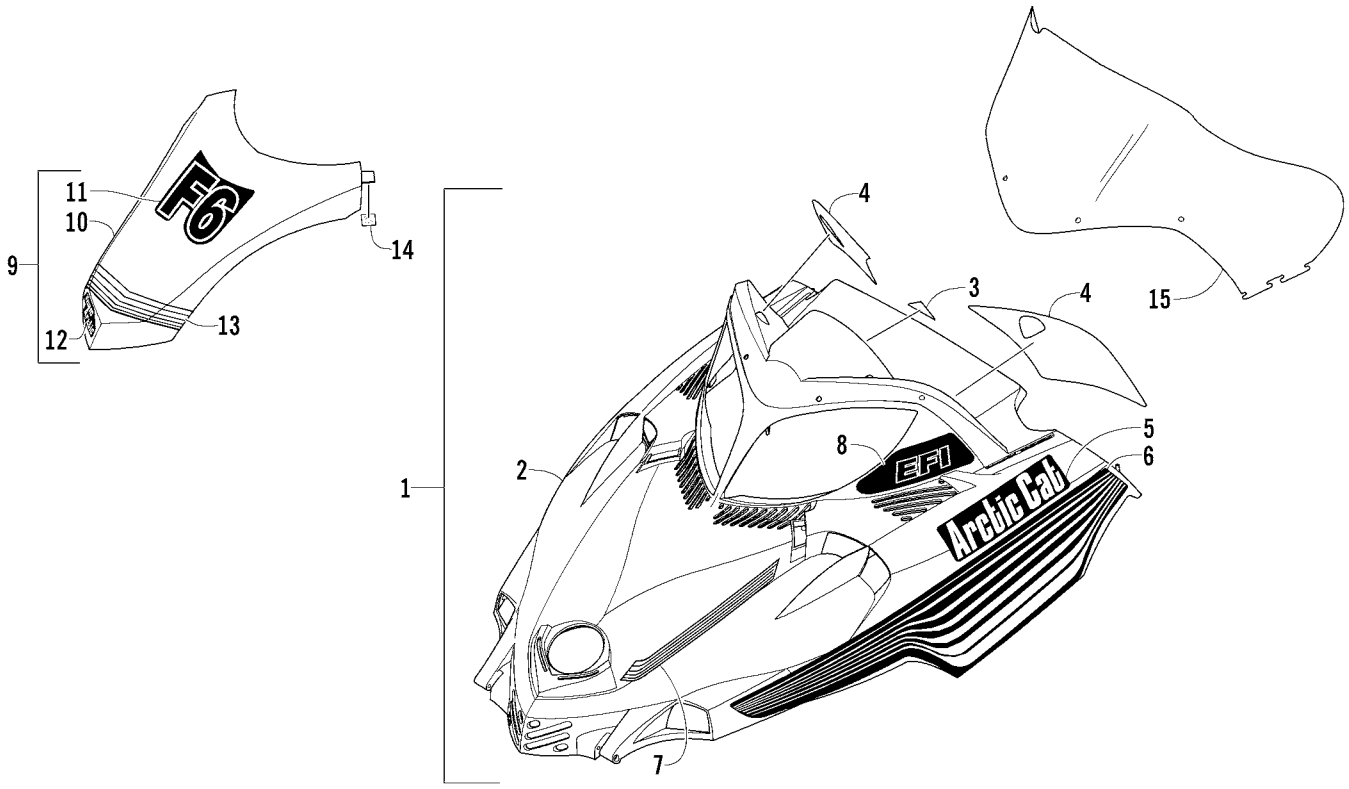

HOOD AND WINDSHIELD ASSEMBLY (600 EFI Retro)

0739-935

Ref.	Part No.	Qty.	Description	Ref.	Part No.	Qty.	Description
1	1718-702	1	Hood w/Decals - Black (inc. 2-8)	8	6611-290	1	● Decal, Hood - Upper Right
2	1718-636	1	● Hood w/o Decals		6611-291	1	● Decal, Hood - Upper Left
3	3611-611	1	● Decal, “Made In U.S.A.” - Domed	9	1718-703	1	Cover, Hood - Black (inc. 10-14)
4	6611-292	1	● Decal, Console - Right	10	2706-031	1	● Cover, Hood w/o Decals
	6611-293	1	● Decal, Console - Left	11	6611-280	1	● Decal, Cover - Crest
5	6611-288	2	● Decal, Hood - “Arctic Cat”	12	6611-282	1	● Decal, Cover - “Team Arctic”
6	6611-284	1	● Decal, Hood - Lower Right	13	6611-283	1	● Decal, Cover - Front
	6611-285	1	● Decal, Hood - Lower Left	14	2606-007	1	● Foil, Protective
7	6611-286	1	● Decal, Hood - Front - Right	15	3606-250	1	Windshield
	6611-287	1	● Decal, Hood - Front - Left				

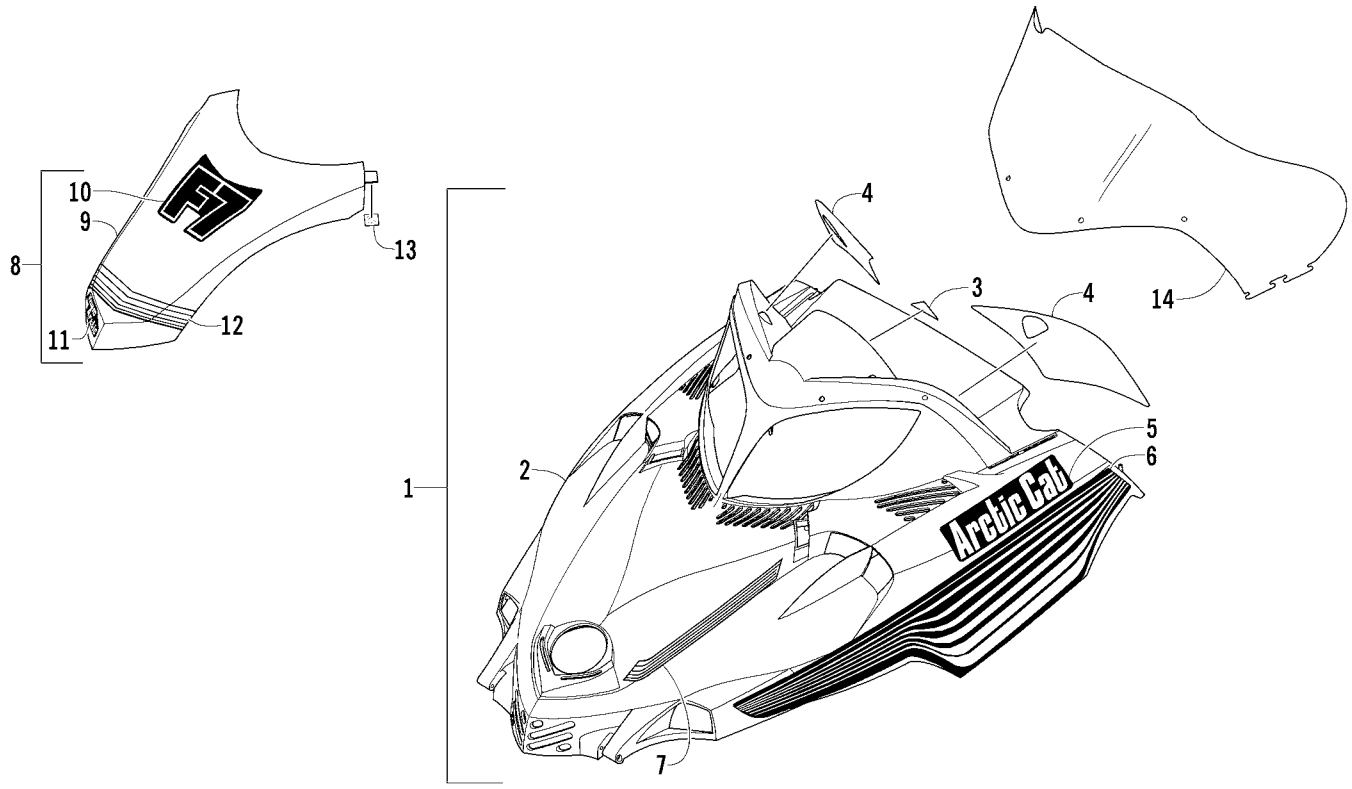

HOOD AND WINDSHIELD ASSEMBLY (700 Retro)

0740-051

Ref.	Part No.	Qty.	Description	Ref.	Part No.	Qty.	Description
1	1718-701	1	Hood w/Decals - Black (inc. 2-7)	8	1718-704	1	Cover, Hood - Black (inc. 9-13)
2	1718-636	1	● Hood w/o Decals	9	2706-031	1	● Cover, Hood w/o Decals
3	3611-611	1	● Decal, “Made In U.S.A.” - Domed	10	6611-281	1	● Decal, Cover - Crest
4	6611-292	1	● Decal, Console - Right	11	6611-282	1	● Decal, Cover - “Team Arctic”
	6611-293	1	● Decal, Console - Left	12	6611-283	1	● Decal, Cover - Front
5	6611-288	2	● Decal, Hood - “Arctic Cat”	13	2606-007	1	● Foil, Protective
6	6611-284	1	● Decal, Hood - Lower Right	14	3606-250	1	Windshield
	6611-285	1	● Decal, Hood - Lower Left				
7	6611-286	1	● Decal, Hood - Front - Right				
	6611-287	1	● Decal, Hood - Front - Left				

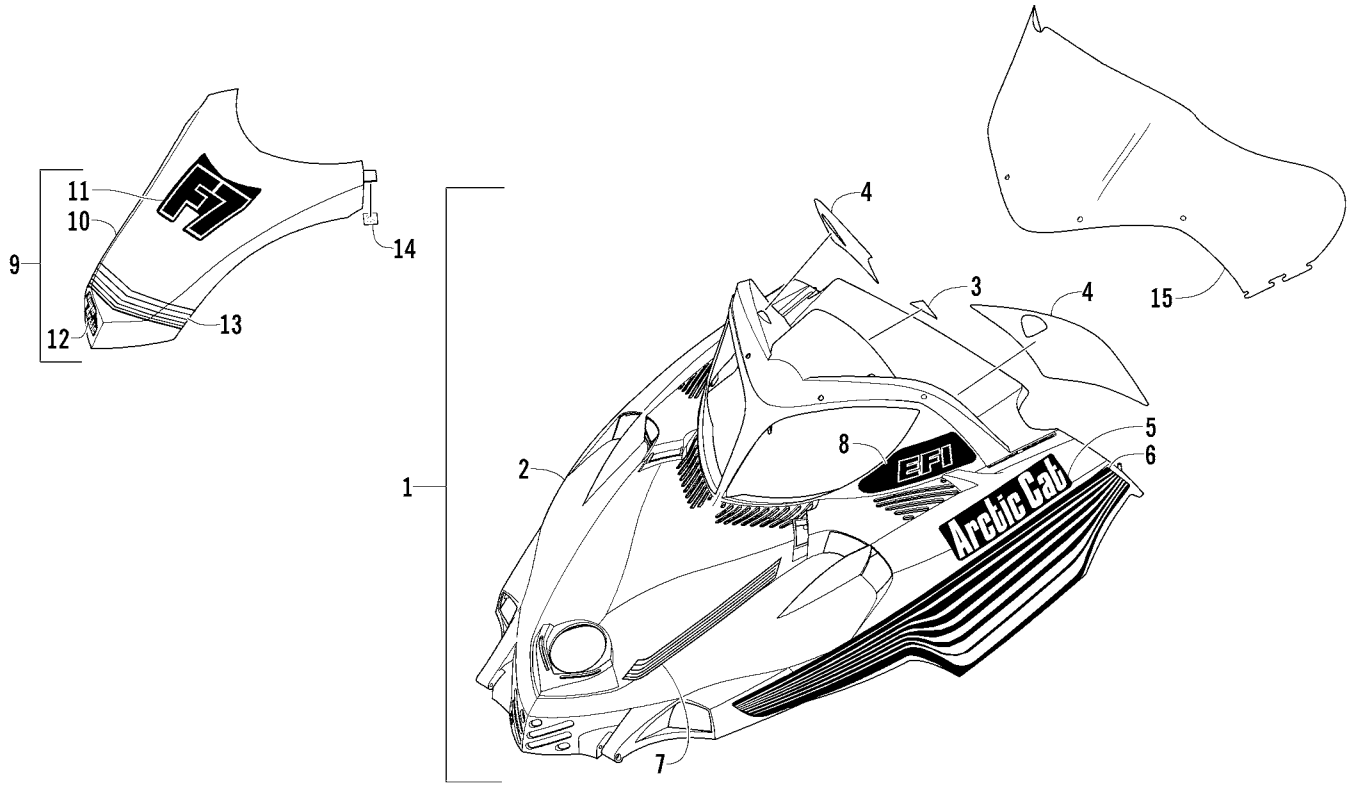

HOOD AND WINDSHIELD ASSEMBLY (700 EFI Retro)

0740-050

Ref.	Part No.	Qty.	Description	Ref.	Part No.	Qty.	Description
1	1718-702	1	Hood w/Decals - Black (inc. 2-8)	8	6611-290	1	● Decal, Hood - Upper Right
2	1718-636	1	● Hood w/o Decals		6611-291	1	● Decal, Hood - Upper Left
3	3611-611	1	● Decal, “Made In U.S.A.” - Domed	9	1718-704	1	Cover, Hood - Black (inc. 10-14)
4	6611-292	1	● Decal, Console - Right	10	2706-031	1	● Cover, Hood w/o Decals
	6611-293	1	● Decal, Console - Left	11	6611-281	1	● Decal, Cover - Crest
5	6611-288	2	● Decal, Hood - “Arctic Cat”	12	6611-282	1	● Decal, Cover - “Team Arctic”
6	6611-284	1	● Decal, Hood - Lower Right	13	6611-283	1	● Decal, Cover - Front
	6611-285	1	● Decal, Hood - Lower Left	14	2606-007	1	● Foil, Protective
7	6611-286	1	● Decal, Hood - Front - Right	15	3606-250	1	Windshield
	6611-287	1	● Decal, Hood - Front - Left				

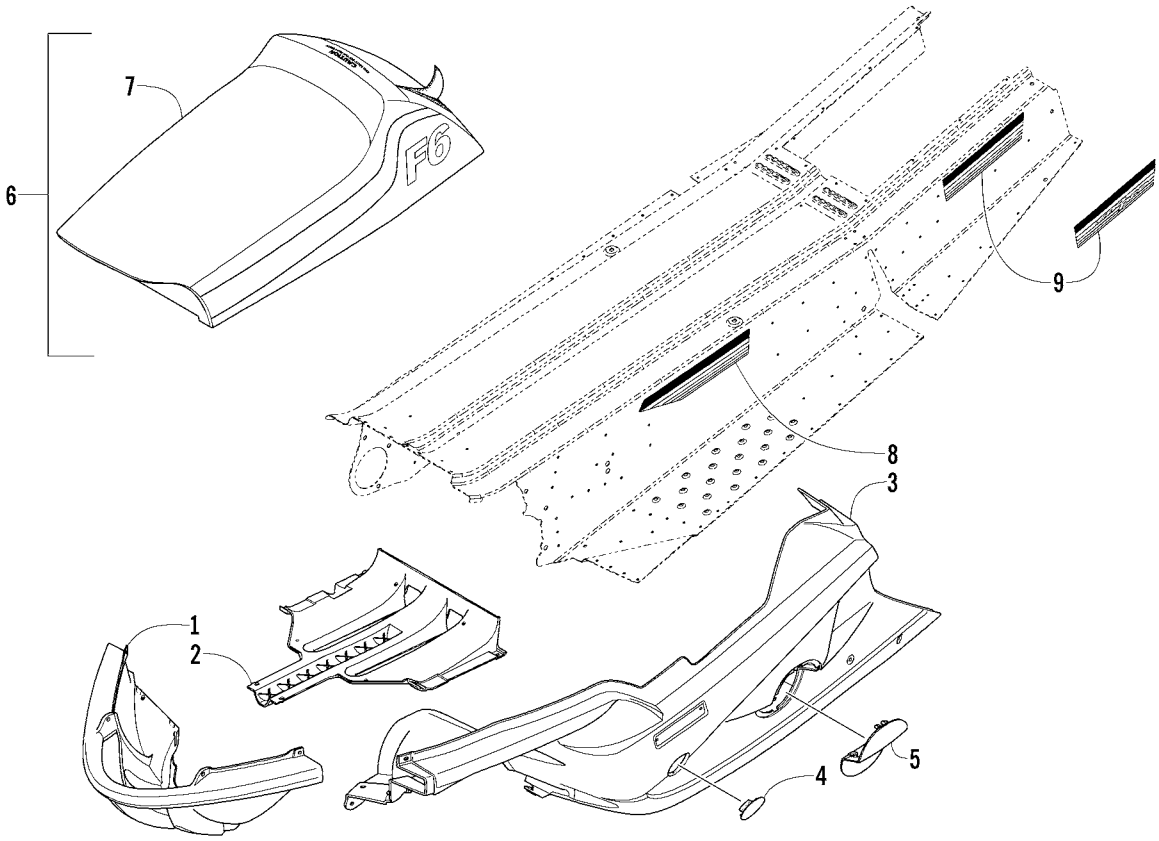

SEAT, BELLY PAN, AND DECALS (600 EFI Retro)

0740-052

Ref.	Part No.	Qty.	Description	Ref.	Part No.	Qty.	Description
1	3606-086	1	Bumper, Front - Black	7	2706-755	1	● Cover, Seat
2	3606-085	1	Belly Pan - Center - Black	8	6611-294	1	Decal, Tunnel - Front - Right
3	2606-646	1	Belly Pan - Right - Black		6611-295	1	Decal, Tunnel - Front - Left
	3606-913	1	Belly Pan - Left - Black	9	6611-296	1	Decal, Tunnel - Rear - Right
4	2606-650	1	Panel, Access - Drive Clutch		6611-297	1	Decal, Tunnel - Rear - Left
5	3606-912	1	Panel, Access - Driven Clutch		6611-298	1	Decal, Tunnel - Rear - Right (Sno Pro)
6	7998-201	1	Complete Seat Assembly (inc. 7)		6611-299	1	Decal, Tunnel - Rear - Left (Sno Pro)

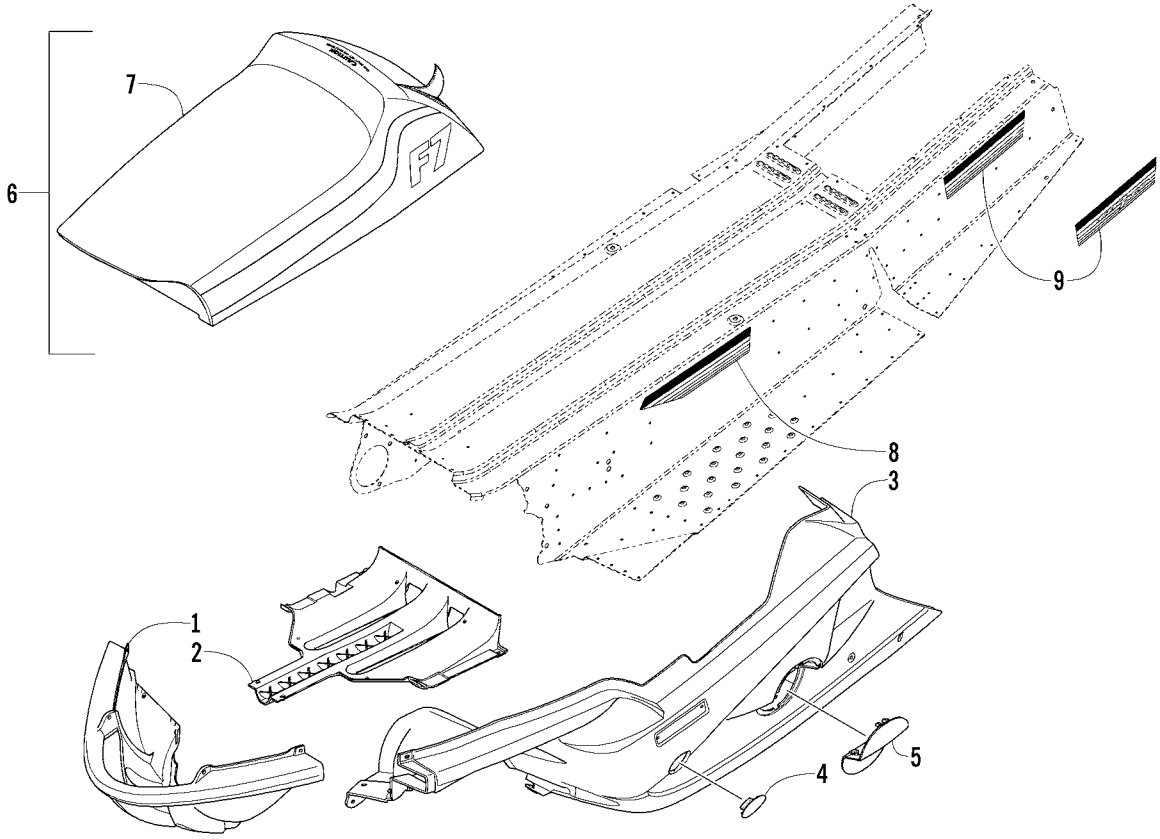

SEAT, BELLY PAN, AND DECALS (700 Retro/700 EFI Retro)

0740-053

Ref.	Part No.	Qty.	Description	Ref.	Part No.	Qty.	Description
1	3606-086	1	Bumper, Front - Black	7	2706-756	1	● Cover, Seat
2	3606-085	1	Belly Pan - Center - Black	8	6611-294	1	Decal, Tunnel - Front - Right
3	2606-646	1	Belly Pan - Right - Black		6611-295	1	Decal, Tunnel - Front - Left
	3606-913	1	Belly Pan - Left - Black	9	6611-296	1	Decal, Tunnel - Rear - Right
4	2606-650	1	Panel, Access - Drive Clutch		6611-297	1	Decal, Tunnel - Rear - Left
5	3606-912	1	Panel, Access - Driven Clutch		6611-298	1	Decal, Tunnel - Rear - Right (Sno Pro)
6	7998-202	1	Complete Seat Assembly (inc. 7)		6611-299	1	Decal, Tunnel - Rear - Left (Sno Pro)

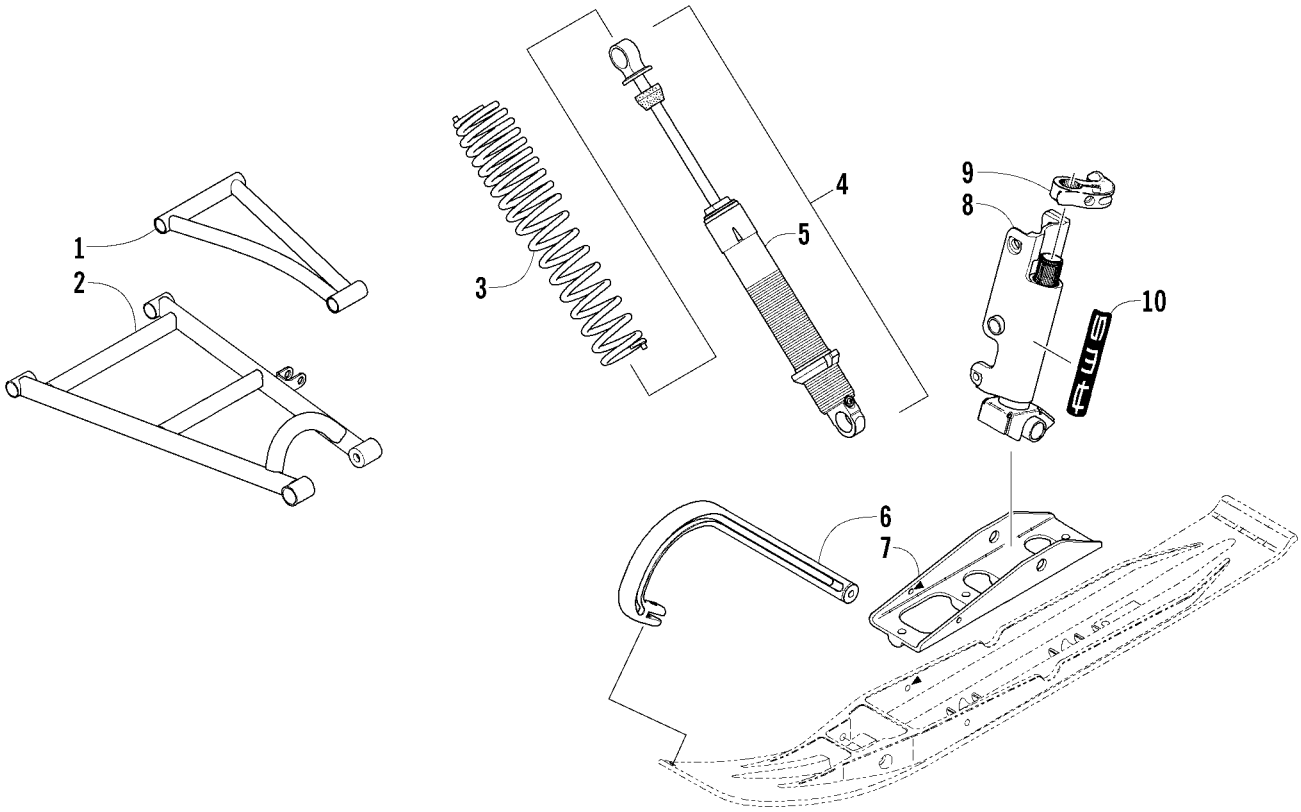

FRONT SUSPENSION (Black Widow)

0740-054

Ref.	Part No.	Qty.	Description	Ref.	Part No.	Qty.	Description
1	1703-426	2	A-Arm, Upper - Black	6	0603-624	2	Handle, Plastic - Black
2	1703-734	1	A-Arm, Lower - Right - Black	7	1703-503	2	Saddle, Ski - Black
	1703-735	1	A-Arm, Lower - Left - Black	8	1703-724	1	Spindle, Steering - Right - Black (inc. 9)
3	1703-440	2	Spring - Black (STD)		1703-725	1	Spindle, Steering - Left - Black (inc. 9)
4	1703-796	2	Shock, Ski (inc. 5) (STD)	9	1703-659	2	● Arm, Steering
5	2603-281	2	● Body, Shock (STD)	10	6611-278	2	Decal, Spindle

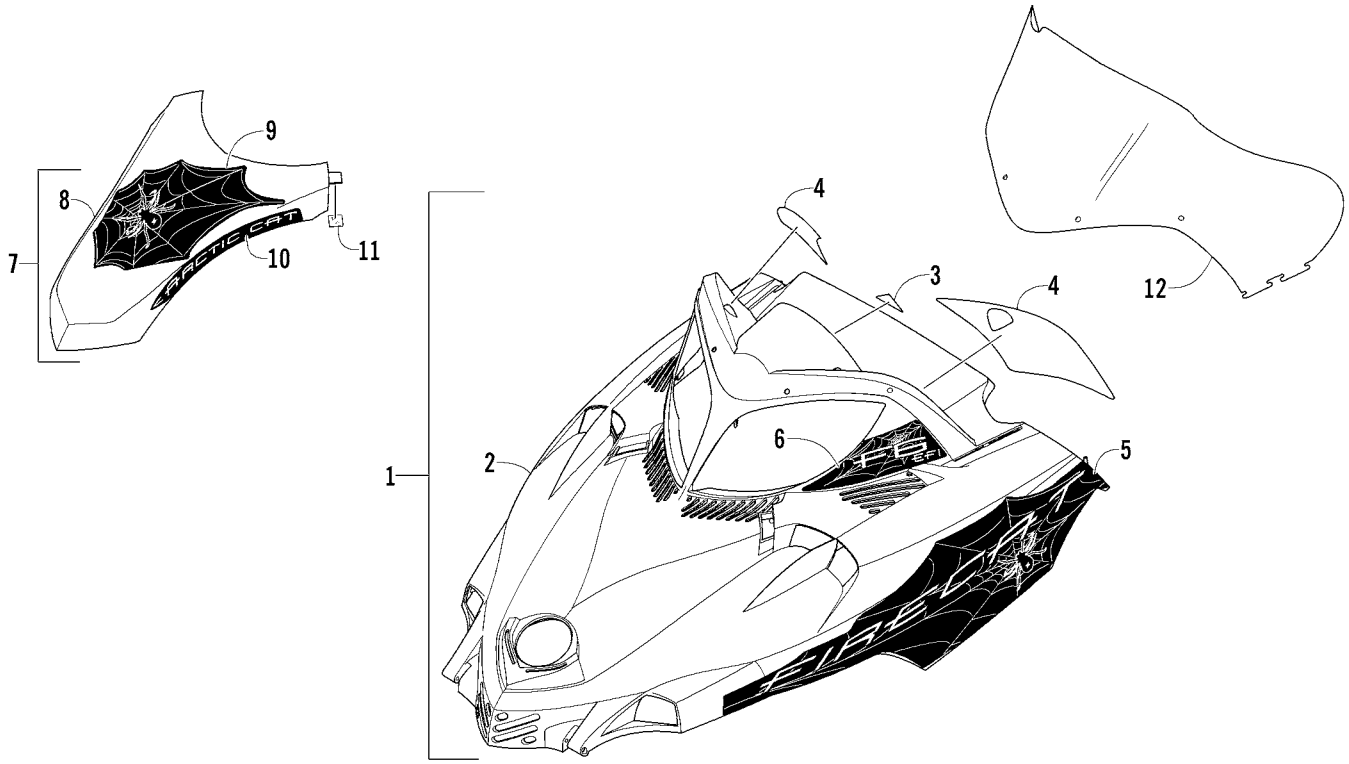

HOOD AND WINDSHIELD ASSEMBLY (600 EFI Black Widow)

0739-934

Ref.	Part No.	Qty.	Description	Ref.	Part No.	Qty.	Description
1	1718-705	1	Hood w/Decals - Black (inc. 2-6)	7	1718-708	1	Cover, Hood - Black (inc. 8-11)
2	1718-636	1	● Hood w/o Decals - Black	8	2706-031	1	● Cover, Hood w/o Decals
3	3611-611	1	● Decal, “Made In U.S.A.” - Domed	9	6611-263	1	● Decal, Cover - Crest
4	6611-274	1	● Decal, Console - Right	10	6611-264	1	● Decal, Cover - Right
	6611-275	1	● Decal, Console - Left		6611-265	1	● Decal, Cover - Left
5	6611-266	1	● Decal, Hood - Lower Right	11	2606-007	1	● Foil, Protective
	6611-267	1	● Decal, Hood - Lower Left	12	3606-250	1	Windshield
6	6611-268	1	● Decal, Hood - Upper Right				
	6611-269	1	● Decal, Hood - Upper Left				

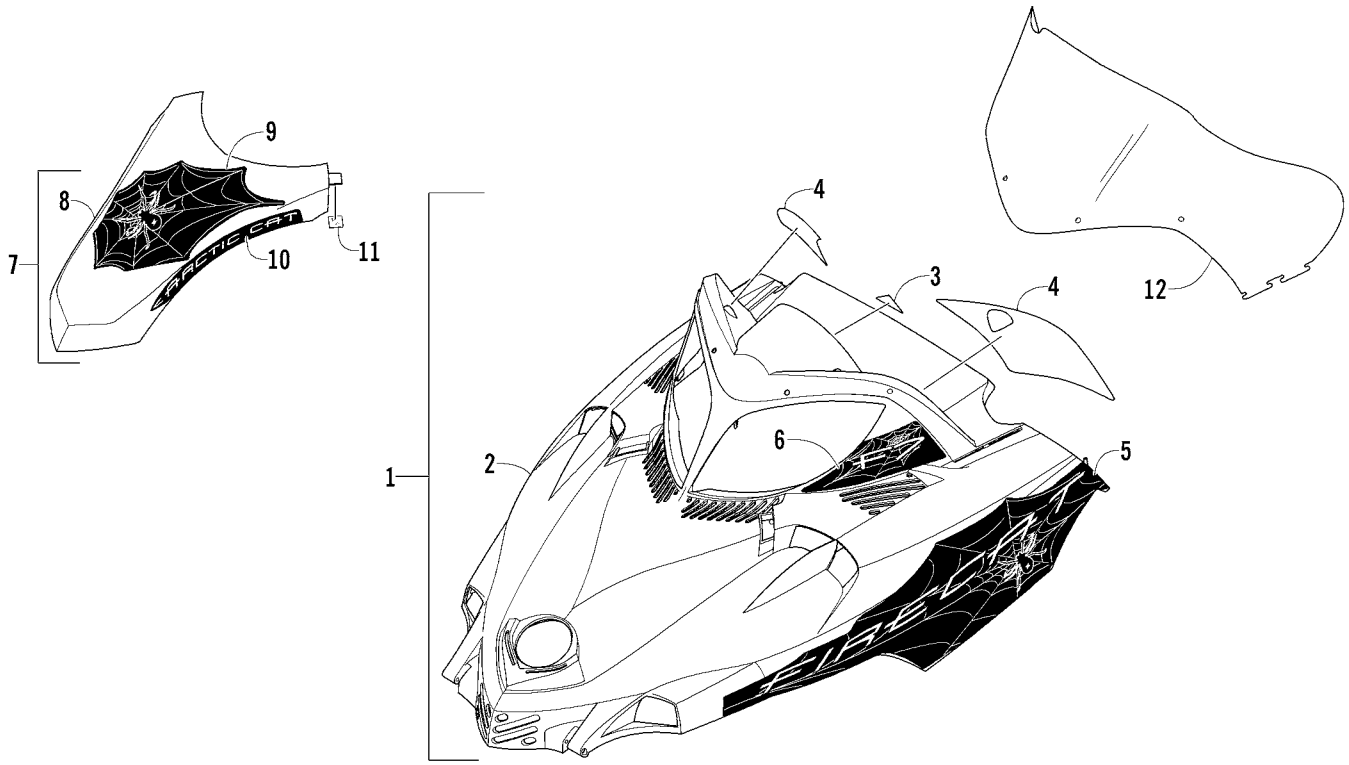

HOOD AND WINDSHIELD ASSEMBLY (700 Black Widow)

0740-056

Ref.	Part No.	Qty.	Description	Ref.	Part No.	Qty.	Description
1	1718-706	1	Hood w/Decals - Black (inc. 2-6)	7	1718-708	1	Cover, Hood - Black (inc. 8-11)
2	1718-636	1	● Hood w/o Decals - Black	8	2706-031	1	● Cover, Hood w/o Decals
3	3611-611	1	● Decal, “Made In U.S.A.” - Domed	9	6611-263	1	● Decal, Cover - Crest
4	6611-274	1	● Decal, Console - Right	10	6611-264	1	● Decal, Cover - Right
	6611-275	1	● Decal, Console - Left		6611-265	1	● Decal, Cover - Left
5	6611-266	1	● Decal, Hood - Lower Right	11	2606-007	1	● Foil, Protective
	6611-267	1	● Decal, Hood - Lower Left	12	3606-250	1	Windshield
6	6611-270	1	● Decal, Hood - Upper Right				
	6611-271	1	● Decal, Hood - Upper Left				

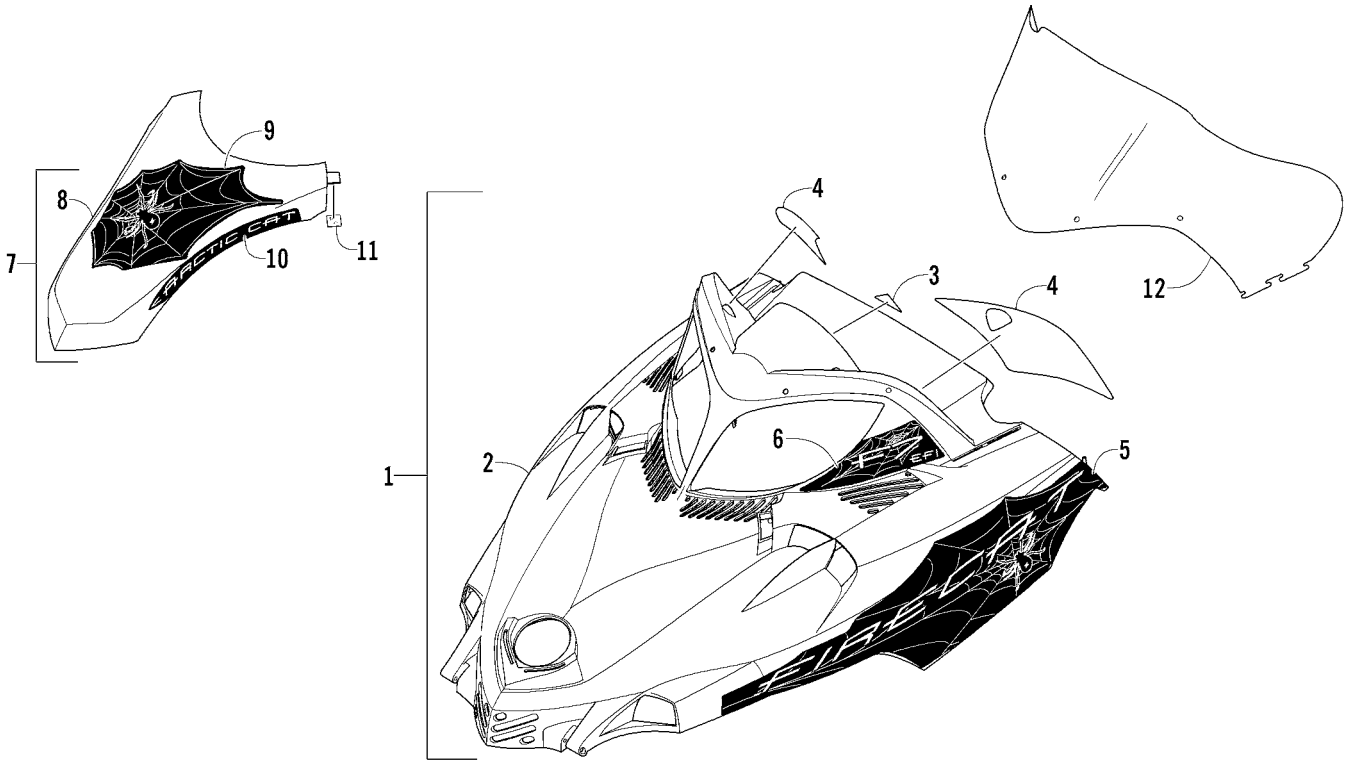

HOOD AND WINDSHIELD ASSEMBLY (700 EFI Black Widow)

0740-055

Ref.	Part No.	Qty.	Description	Ref.	Part No.	Qty.	Description
1	1718-707	1	Hood w/Decals - Black (inc. 2-6)	7	1718-708	1	Cover, Hood - Black (inc. 8-11)
2	1718-636	1	● Hood w/o Decals - Black	8	2706-031	1	● Cover, Hood w/o Decals
3	3611-611	1	● Decal, “Made In U.S.A.” - Domed	9	6611-263	1	● Decal, Cover - Crest
4	6611-274	1	● Decal, Console - Right	10	6611-264	1	● Decal, Cover - Right
	6611-275	1	● Decal, Console - Left		6611-265	1	● Decal, Cover - Left
5	6611-266	1	● Decal, Hood - Lower Right	11	2606-007	1	● Foil, Protective
	6611-267	1	● Decal, Hood - Lower Left	12	3606-250	1	Windshield
6	6611-272	1	● Decal, Hood - Upper Right				
	6611-273	1	● Decal, Hood - Upper Left				

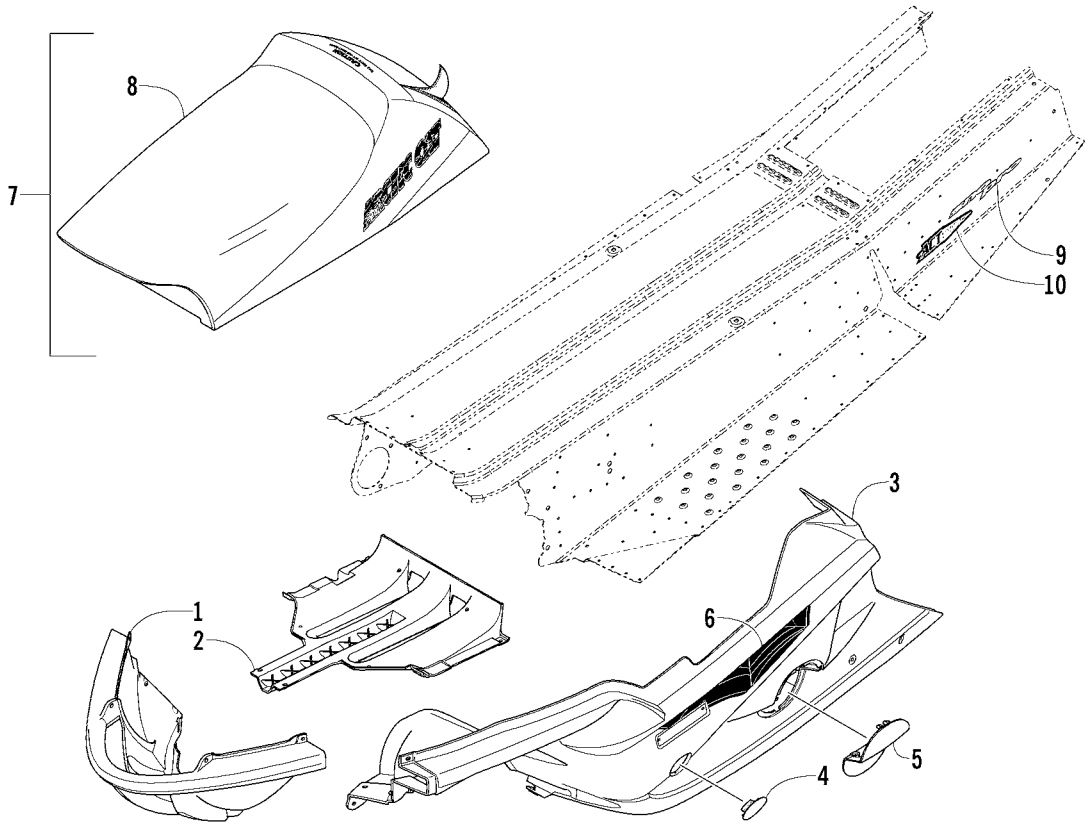

SEAT, BELLY PAN, AND DECALS (Black Widow)

0740-057

Ref.	Part No.	Qty.	Description	Ref.	Part No.	Qty.	Description
1	3606-086	1	Bumper, Front - Black	6	6611-276	1	Decal, Belly Pan - Right
2	3606-085	1	Belly Pan - Center - Black		6611-277	1	Decal, Belly Pan - Left
3	2606-646	1	Belly Pan - Right - Black	7	7998-209	1	Complete Seat Assembly (inc. 8)
	3606-913	1	Belly Pan - Left - Black	8	2706-757	1	● Cover, Seat
4	2606-650	1	Panel, Access - Drive Clutch	9	5611-639	2	Decal, Tunnel (Sno Pro)
5	3606-912	1	Panel, Access - Driven Clutch	10	6611-525	2	Decal, “ACT Drive” - Tunnel

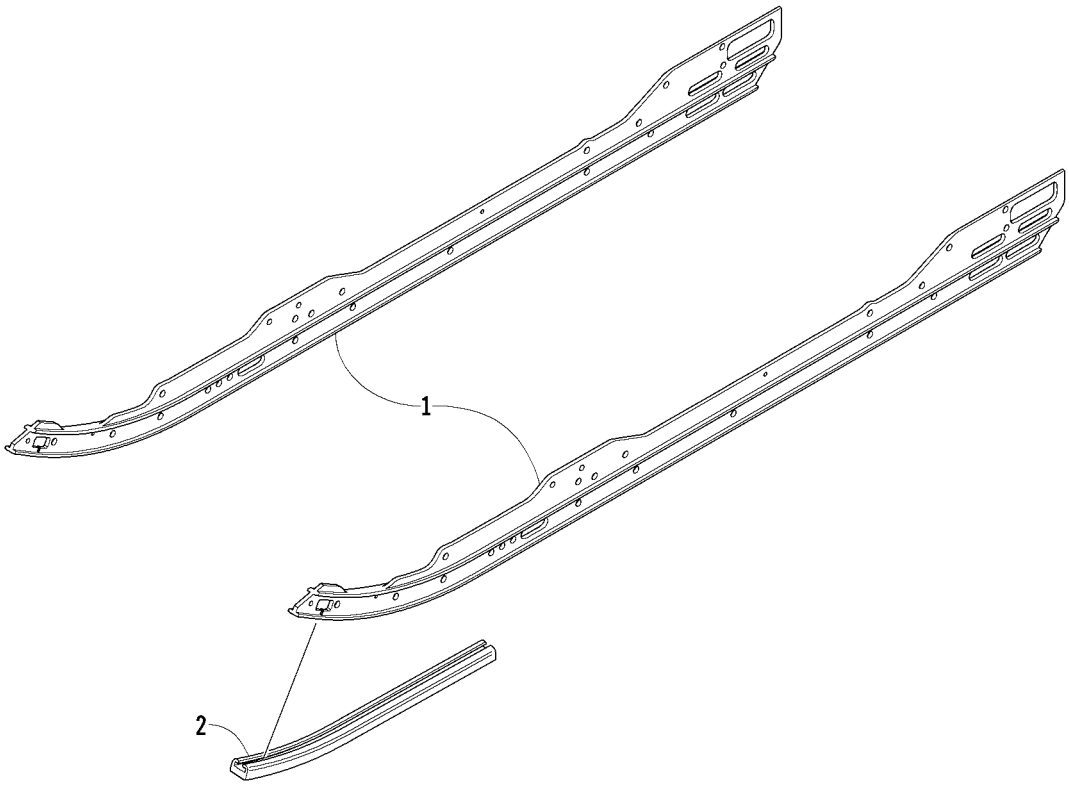

SLIDE RAILS (Black Widow/Joker)

(Complete Skid Frame Assembly p/n 7998-355; p/n 7998-356 Sno Pro)

0740-058

Ref.	Part No.	Qty.	Description	Ref.	Part No.	Qty.	Description
1	1704-363	2	Rail, Formed	2	2604-510	2	Wearstrip, Slide Rail

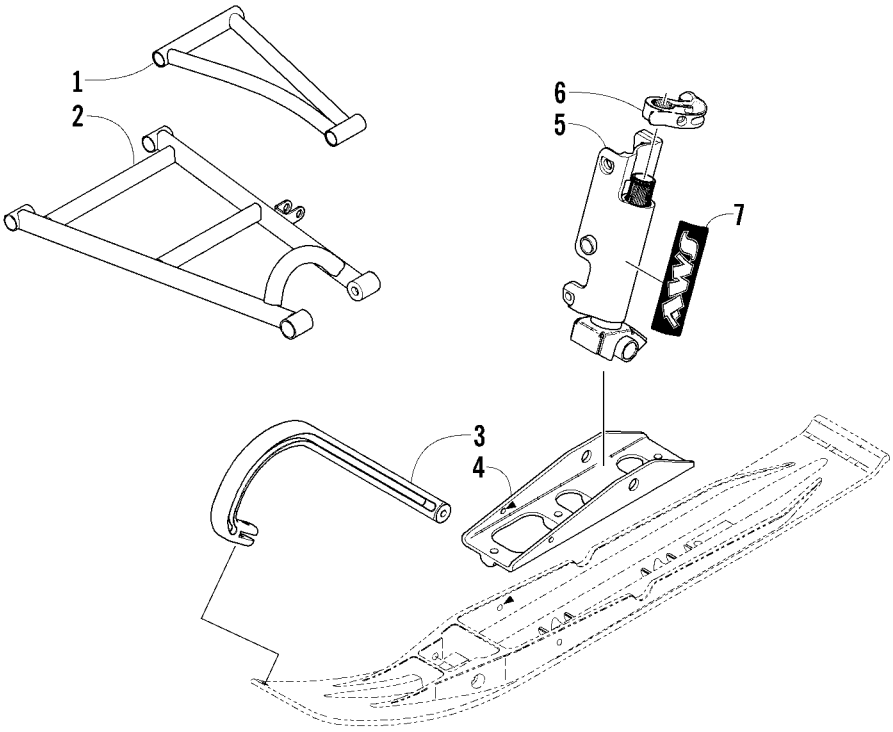

FRONT SUSPENSION (Joker)

0740-059

Ref.	Part No.	Qty.	Description	Ref.	Part No.	Qty.	Description
1	1703-426	2	A-Arm, Upper - Black	5	1703-724	1	Spindle, Steering - Right - Black (inc. 6)
2	1703-734	1	A-Arm, Lower - Right - Black		1703-725	1	Spindle, Steering - Left - Black (inc. 6)
	1703-735	1	A-Arm, Lower - Left - Black	6	1703-659	2	● Arm, Steering
3	0603-624	2	Handle, Plastic - Black	7	6611-379	2	Decal, Spindle
4	1703-503	2	Saddle, Ski - Black				

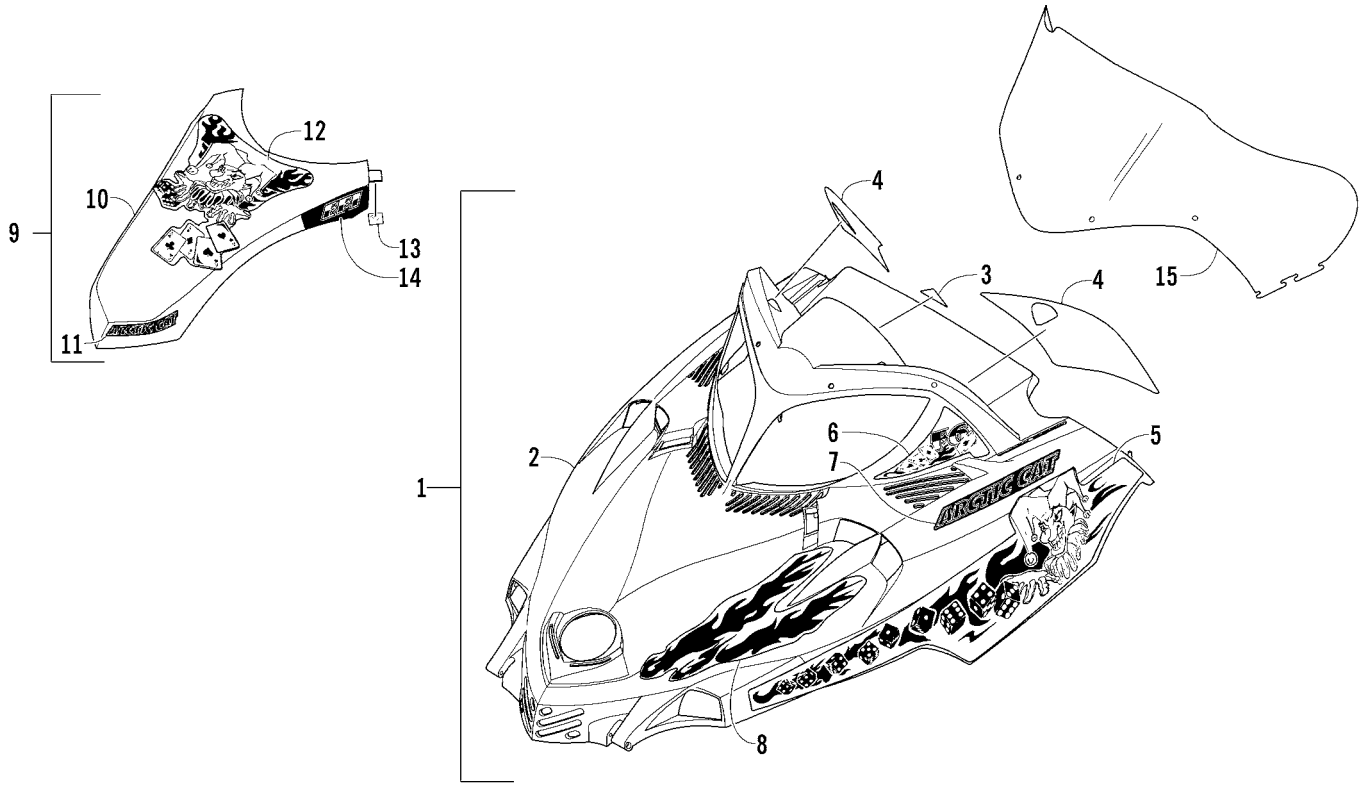

HOOD AND WINDSHIELD ASSEMBLY (600 EFI Joker)

0739-938

Ref.	Part No.	Qty.	Description	Ref.	Part No.	Qty.	Description
1	1718-685	1	Hood w/Decals - Black (inc. 2-8)	8	6611-392	1	● Decal, Hood - Front - Right
	1718-688	1	Hood w/Decals - Red (inc. 2-8) (Red)		6611-393	1	● Decal, Hood - Front - Left
2	1718-636	1	● Hood w/o Decals - Black		6611-408	1	● Decal, Hood - Front - Right (Red)
	1718-637	1	● Hood w/o Decals - Red (Red)		6611-409	1	● Decal, Hood - Front - Left (Red)
3	3611-611	1	● Decal, “Made In U.S.A.” - Domed	9	1718-691	1	Cover, Hood - Black (inc. 10-14)
4	6611-388	1	● Decal, Console - Right		1718-693	1	Cover, Hood - Red (inc. 10-14) (Red)
	6611-389	1	● Decal, Console - Left	10	2706-031	1	● Cover, Hood w/o Decals - Black
	6611-418	1	● Decal, Console - Right (Red)		2706-761	1	● Cover, Hood w/o Decals - Red (Red)
	6611-391	1	● Decal, Console - Left (Red)	11	6611-384	1	● Decal, “Arctic Cat”
5	6611-394	1	● Decal, Hood - Lower Right		6611-406	1	● Decal, “Arctic Cat” (Red)
	6611-395	1	● Decal, Hood - Lower Left	12	6611-385	1	● Decal, Cover Crest
	6611-410	1	● Decal, Hood - Lower Right (Red)		6611-407	1	● Decal, Cover Crest (Red)
	6611-411	1	● Decal, Hood - Lower Left (Red)	13	2606-007	1	● Foil, Protective
6	6611-396	1	● Decal, Hood - Upper Right	14	6611-382	1	● Decal, “EFI” - Right
	6611-397	1	● Decal, Hood - Upper Left		6611-383	1	● Decal, “EFI” - Left
	6611-412	1	● Decal, Hood - Upper Right (Red)		6611-404	1	● Decal, “EFI” - Right (Red)
	6611-413	1	● Decal, Hood - Upper Left (Red)		6611-405	1	● Decal, “EFI” - Left (Red)
7	6611-386	2	● Decal, “Arctic Cat” - Hood	15	3606-250	1	Windshield
	6611-387	2	● Decal, “Arctic Cat” - Hood (Red)				

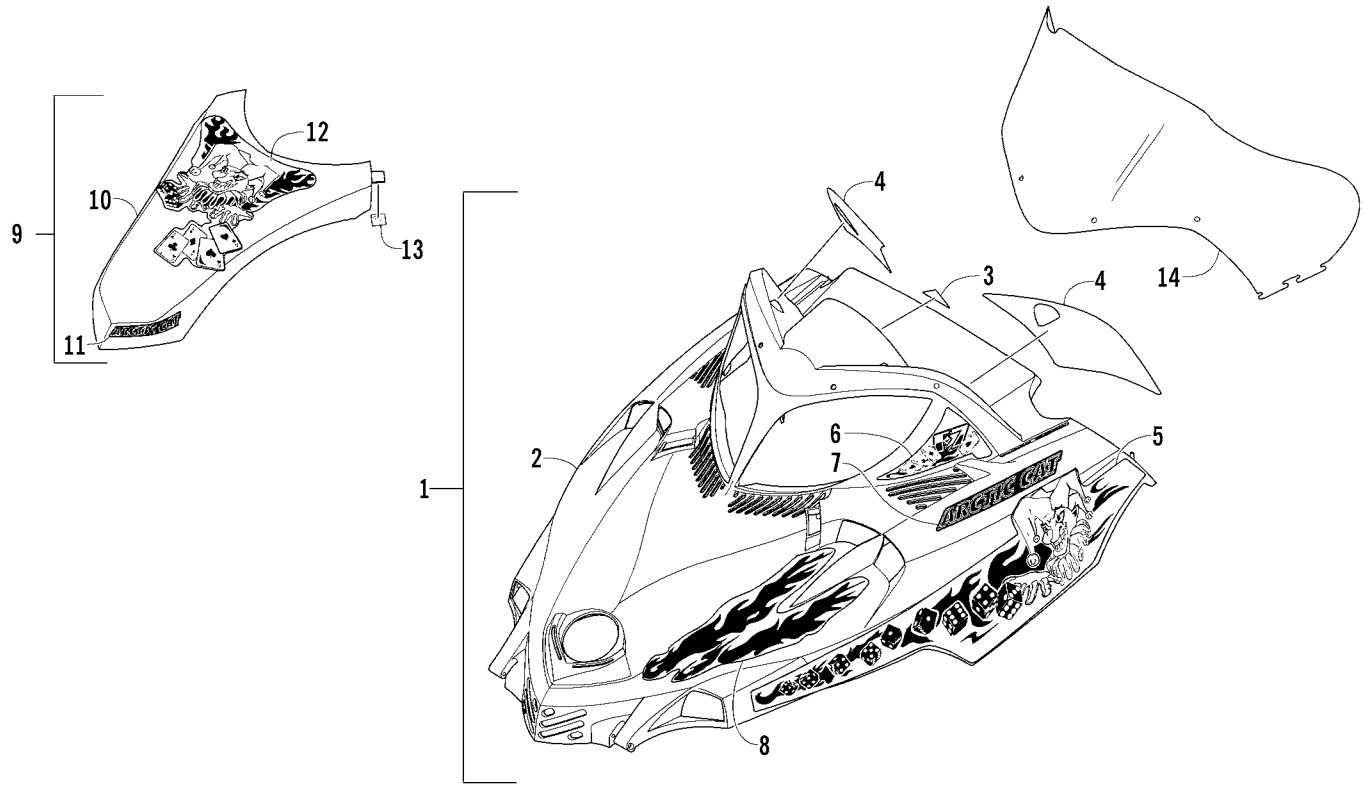

HOOD AND WINDSHIELD ASSEMBLY (700 Joker)

0740-061

Ref.	Part No.	Qty.	Description	Ref.	Part No.	Qty.	Description
1	1718-686	1	Hood w/Decals - Black (inc. 2-8)	7	6611-386	2	● Decal, “Arctic Cat” - Hood
	1718-689	1	Hood w/Decals - Red (inc. 2-8) (Red)		6611-387	2	● Decal, “Arctic Cat” - Hood (Red)
2	1718-636	1	● Hood w/o Decals - Black	8	6611-392	1	● Decal, Hood - Front - Right
	1718-637	1	● Hood w/o Decals - Red (Red)		6611-393	1	● Decal, Hood - Front - Left
3	3611-611	1	● Decal, “Made In U.S.A.” - Domed		6611-408	1	● Decal, Hood - Front - Right (Red)
4	6611-390	1	● Decal, Console - Right		6611-409	1	● Decal, Hood - Front - Left (Red)
	6611-389	1	● Decal, Console - Left	9	1718-692	1	Cover, Hood - Black (inc. 10-13)
	6611-420	1	● Decal, Console - Right (Red)		1718-694	1	Cover, Hood - Red (inc. 10-13) (Red)
	6611-391	1	● Decal, Console - Left (Red)	10	2706-031	1	● Cover, Hood w/o Decals - Black
5	6611-394	1	● Decal, Hood - Lower Right		2706-761	1	● Cover, Hood w/o Decals - Red (Red)
	6611-395	1	● Decal, Hood - Lower Left	11	6611-384	1	● Decal, “Arctic Cat”
	6611-410	1	● Decal, Hood - Lower Right (Red)		6611-406	1	● Decal, “Arctic Cat” (Red)
	6611-411	1	● Decal, Hood - Lower Left (Red)	12	6611-385	1	● Decal, Cover Crest
6	6611-398	1	● Decal, Hood - Upper Right		6611-407	1	● Decal, Cover Crest (Red)
	6611-399	1	● Decal, Hood - Upper Left	13	2606-007	1	● Foil, Protective
	6611-414	1	● Decal, Hood - Upper Right (Red)	14	3606-250	1	Windshield
	6611-415	1	● Decal, Hood - Upper Left (Red)				

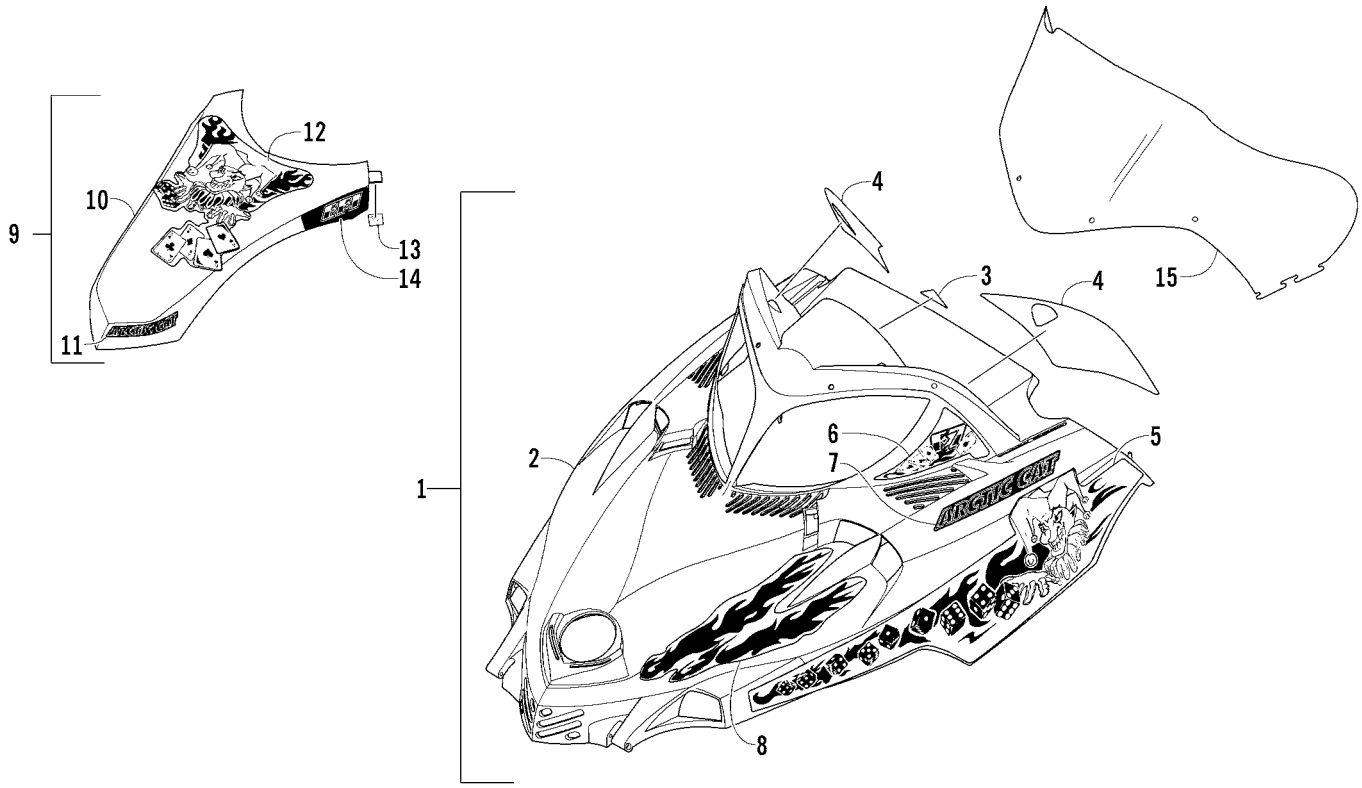

HOOD AND WINDSHIELD ASSEMBLY (700 EFI Joker)

0740-060

Ref.	Part No.	Qty.	Description	Ref.	Part No.	Qty.	Description
1	1718-686	1	Hood w/Decals - Black (inc. 2-8)	8	6611-392	1	● Decal, Hood - Front - Right
	1718-689	1	Hood w/Decals - Red (inc. 2-8) (Red)		6611-393	1	● Decal, Hood - Front - Left
2	1718-636	1	● Hood w/o Decals - Black		6611-408	1	● Decal, Hood - Front - Right (Red)
	1718-637	1	● Hood w/o Decals - Red (Red)		6611-409	1	● Decal, Hood - Front - Left (Red)
3	3611-611	1	● Decal, “Made In U.S.A.” - Domed	9	1718-691	1	Cover, Hood - Black (inc. 10-14)
4	6611-390	1	● Decal, Console - Right		1718-693	1	Cover, Hood - Red (inc. 10-14) (Red)
	6611-389	1	● Decal, Console - Left	10	2706-031	1	● Cover, Hood w/o Decals - Black
	6611-420	1	● Decal, Console - Right (Red)		2706-761	1	● Cover, Hood w/o Decals - Red (Red)
	6611-391	1	● Decal, Console - Left (Red)	11	6611-384	1	● Decal, “Arctic Cat”
5	6611-394	1	● Decal, Hood - Lower Right		6611-406	1	● Decal, “Arctic Cat” (Red)
	6611-395	1	● Decal, Hood - Lower Left	12	6611-385	1	● Decal, Cover Crest
	6611-410	1	● Decal, Hood - Lower Right (Red)		6611-407	1	● Decal, Cover Crest (Red)
	6611-411	1	● Decal, Hood - Lower Left (Red)	13	2606-007	1	● Foil, Protective
6	6611-398	1	● Decal, Hood - Upper Right	14	6611-382	1	● Decal, “EFI” - Right
	6611-399	1	● Decal, Hood - Upper Left		6611-383	1	● Decal, “EFI” - Left
	6611-414	1	● Decal, Hood - Upper Right (Red)		6611-404	1	● Decal, “EFI” - Right (Red)
	6611-415	1	● Decal, Hood - Upper Left (Red)		6611-405	1	● Decal, “EFI” - Left (Red)
7	6611-386	2	● Decal, “Arctic Cat” - Hood	15	3606-250	1	Windshield
	6611-387	2	● Decal, “Arctic Cat” - Hood (Red)				

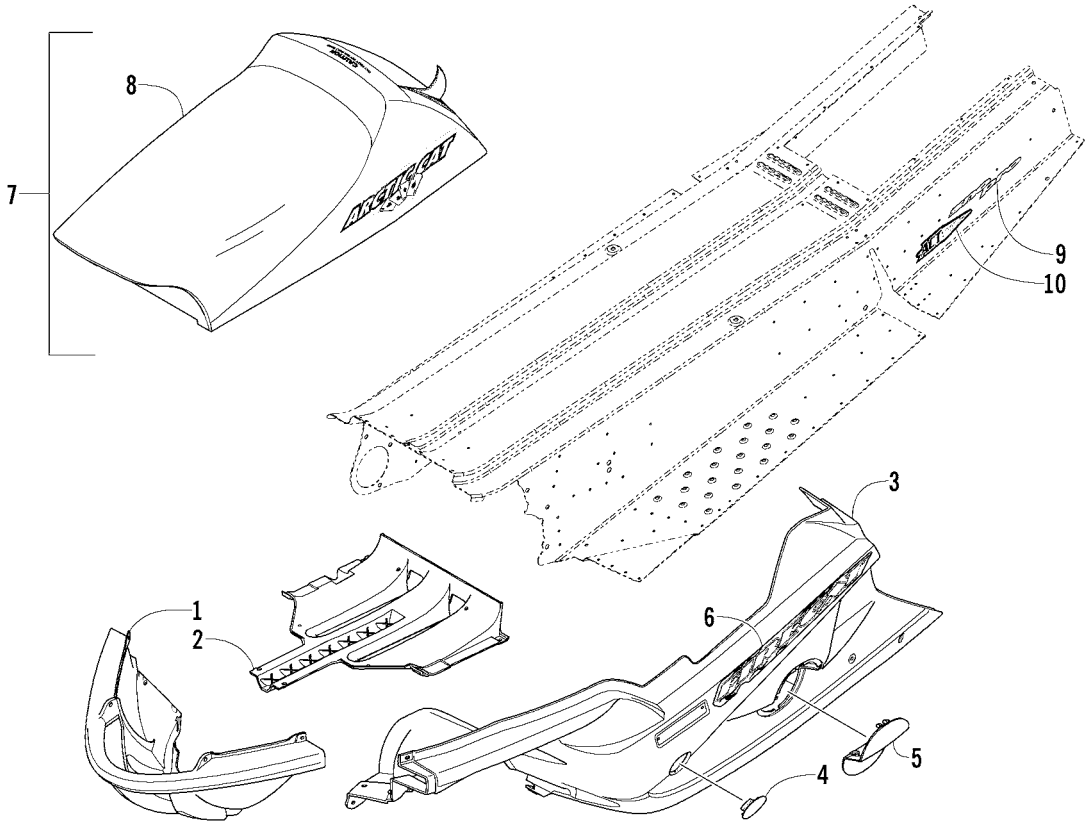

SEAT, BELLY PAN, AND DECALS (Joker)

0740-062

Ref.	Part No.	Qty.	Description	Ref.	Part No.	Qty.	Description
1	3606-086	1	Bumper, Front - Black	6	6611-380	1	Decal, Belly Pan - Right
	3606-579	1	Bumper, Front - Red (Red)		6611-381	1	Decal, Belly Pan - Left
2	3606-085	1	Belly Pan - Center - Black		6611-402	1	Decal, Belly Pan - Right (Red)
	3606-578	1	Belly Pan - Center - Red (Red)		6611-403	1	Decal, Belly Pan - Left (Red)
3	2606-646	1	Belly Pan - Right - Black	7	7998-168	1	Complete Seat Assembly (inc. 8)
	3606-913	1	Belly Pan - Left - Black		7998-169	1	Complete Seat Assembly (inc. 8) (Red)
	3606-614	1	Belly Pan - Right - Red (Red)	8	2706-744	1	● Cover, Seat
	3606-917	1	Belly Pan - Left - Red (Red)		2706-745	1	● Cover, Seat (Red)
4	2606-650	1	Panel, Access - Drive Clutch - Black	9	5611-639	2	Decal, Tunnel (Sno Pro)
	3606-569	1	Panel, Access - Drive Clutch - Red (Red)	10	6611-525	2	Decal, “ACT Drive” - Tunnel
5	3606-912	1	Panel, Access - Driven Clutch - Black				
	3606-916	1	Panel, Access - Driven Clutch - Red (Red)				

Printed in U.S.A.

p/n 2257-147