ARCTIC CAT®

Illustrated Parts Manual

Sabercat 700 EFI EXT

2005

Overseas, red

Model Number **S2005SCFXE0SR**

TABLE OF CONTENTS
2005 Sabercat 700 EFI EXT

Model No. S2005SCFXEOSR - EXT Red

SKI AND SPINDLE ASSEMBLY . . . 1
A-ARM ASSEMBLY . . . 2
SHOCK ABSORBER AND SWAY BAR ASSEMBLY . . . 3
FRONT SUSPENSION SHOCK ABSORBER . . . 4
STEERING POST ASSEMBLY . . . 5
TIE ROD ASSEMBLY . . . 6
CONTROL ASSEMBLY . . . 7
HANDLEBAR ASSEMBLY . . . 8
HYDRAULIC BRAKE CONTROL ASSEMBLY . . . 9
DRIVE TRAIN SHAFTS AND BRAKE ASSEMBLIES . . . 10
DRIVE/DROPCASE ASSEMBLY . . . 11
DRIVE/REVERSE DROPCASE ASSEMBLY (LX/EXT) . . . 12
DROPCASE AND CHAIN TENSION ASSEMBLY (LX/EXT) . . . 13
REVERSE SHIFT LEVER ASSEMBLY (LX/EXT) . . . 14
SLIDE RAIL AND TRACK ASSEMBLY . . . 15

IDLER WHEEL ASSEMBLY . . . 16
REAR SUSPENSION FRONT ARM ASSEMBLY . . . 17
REAR SUSPENSION FRONT ARM SHOCK ABSORBER . . . 18
REAR SUSPENSION REAR ARM ASSEMBLY . . . 19
REAR SUSPENSION REAR ARM SHOCK ABSORBER . . . 20

FRONT FRAME AND FOOTREST ASSEMBLY . . . 21
HOOD AND WINDSHIELD ASSEMBLY . . . 22
HEADLIGHT, INSTRUMENTS, AND WIRING ASSEMBLIES . . . 23
HEADLIGHT, INSTRUMENTS, AND WIRING ASSEMBLIES (LX/EXT) . . . 24
CONSOLE AND SWITCH ASSEMBLY . . . 25
BELLY PAN ASSEMBLY . . . 26
BELT GUARD ASSEMBLY . . . 27
GAS TANK ASSEMBLY . . . 28
FUEL PUMP ASSEMBLY . . . 29
SEAT AND STORAGE BOX ASSEMBLY . . . 30
TUNNEL, REAR BUMPER, AND TAILLIGHT ASSEMBLY . . . 31
TUNNEL, REAR BUMPER, AND TAILLIGHT ASSEMBLY (EXT) . . . 32
COOLING ASSEMBLY . . . 33
ENGINE AND RELATED PARTS . . . 34
EXHAUST ASSEMBLY . . . 35
FLEX-DRIVE STARTER MOTOR ASSEMBLY (LX/EXT) . . . 36
BATTERY, SOLENOID, AND CABLES (LX/EXT) . . . 37
AIR SILENCER ASSEMBLY . . . 38
OIL TANK ASSEMBLY . . . 39
DRIVE CLUTCH . . . 40
DRIVEN CLUTCH . . . 41
CYLINDER AND HEAD ASSEMBLY . . . 42
CRANKCASE ASSEMBLY . . . 43
PISTON AND CRANKSHAFT . . . 44
REED VALVE ASSEMBLY . . . 45
THROTTLE BODY ASSEMBLY . . . 46
OIL PUMP . . . 47
WATER PUMP AND THERMOSTAT . . . 48
RECOIL STARTER . . . 49
MAGNETO . . . 50
ELECTRICAL . . . 51
SERVOMOTOR ASSEMBLY . . . 52
RELATED ITEMS . . . Back Cover

■ **NOTE: The illustrations used in this Parts Manual are for reference to replacement part numbers only and are not to be used for assembly. For assembly procedures, use an Arctic Cat Service Manual. Underlined part numbers are new for the 2005 model year.**

2004 Arctic Cat Inc.
®™ Trademarks of Arctic Cat Inc., Thief River Falls, MN 56701

Printed July 2004

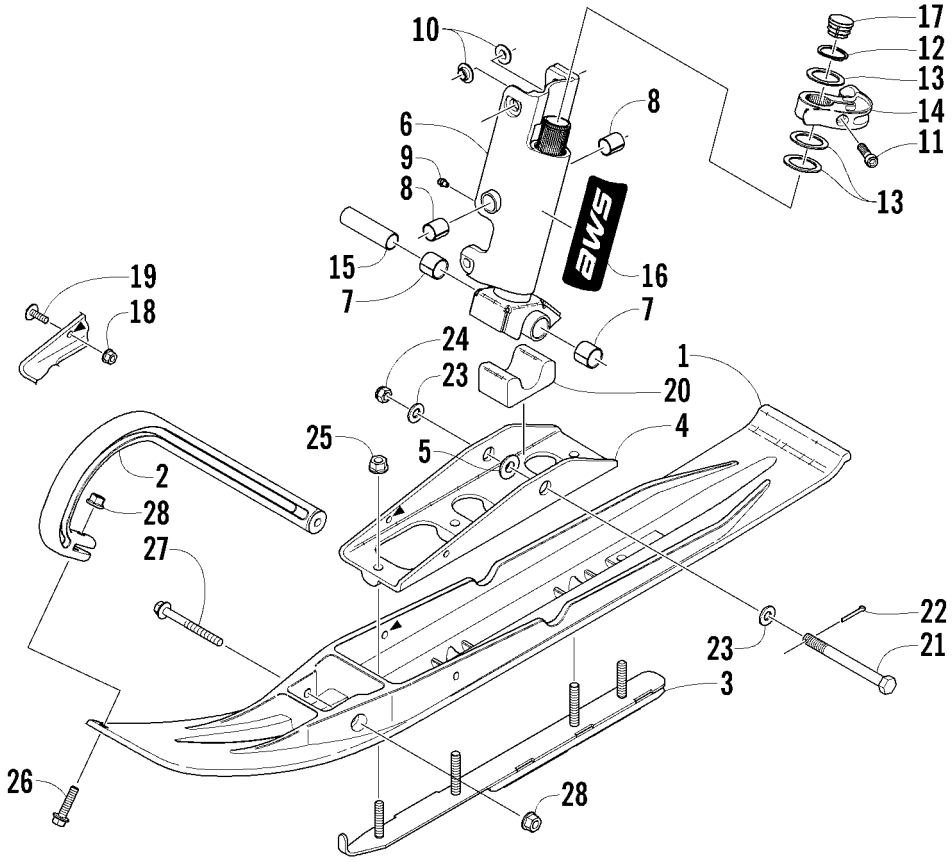

SKI AND SPINDLE ASSEMBLY

0739-677

Ref.	Part No.	Qty.	Description	Ref.	Part No.	Qty.	Description
1	1703-109	2	Ski, Plastic - Black	14	1703-659	2	● Arm, Steering
2	0603-624	2	Handle, Plastic - Black	15	0603-034	2	Axle, Spindle
3	2603-456	1	Wearbar - Right	16	6611-258	2	Decal, “AWS” - Spindle
	2603-457	1	Wearbar - Left				
4	1703-503	2	Saddle, Ski - Black (inc. 5)				
5	0603-621	4	● Insert, Ski Saddle	17	0623-831	2	Cap, Spindle
6	1703-432	1	Spindle, Steering - Right - Black (inc. 7-14)	18	8048-366	4	Nut, Lock
				19	8017-581	4	Screw, Machine
	1703-433	1	Spindle, Steering - Left - Black (inc. 7-14)	20	0603-036	2	Damper, Ski
				21	0623-552	2	Screw, Cap
7	0603-158	4	● Bearing	22	0123-458	2	Pin, Cotter
8	0603-083	4	● Bearing	23	0623-728	4	Washer
9	1623-010	2	● Fitting, Grease	24	0123-296	2	Nut, Lock
10	0603-647	4	● Insert, Spindle	25	8047-486	8	Nut, Lock
11	8005-584	2	● Screw, Cap	26	8020-135	2	Screw, Cap
12	0623-796	2	● Ring, Retaining	27	8020-143	2	Screw, Cap
13	1603-203	6	● Washer, Thrust	28	8048-426	4	Nut, Lock

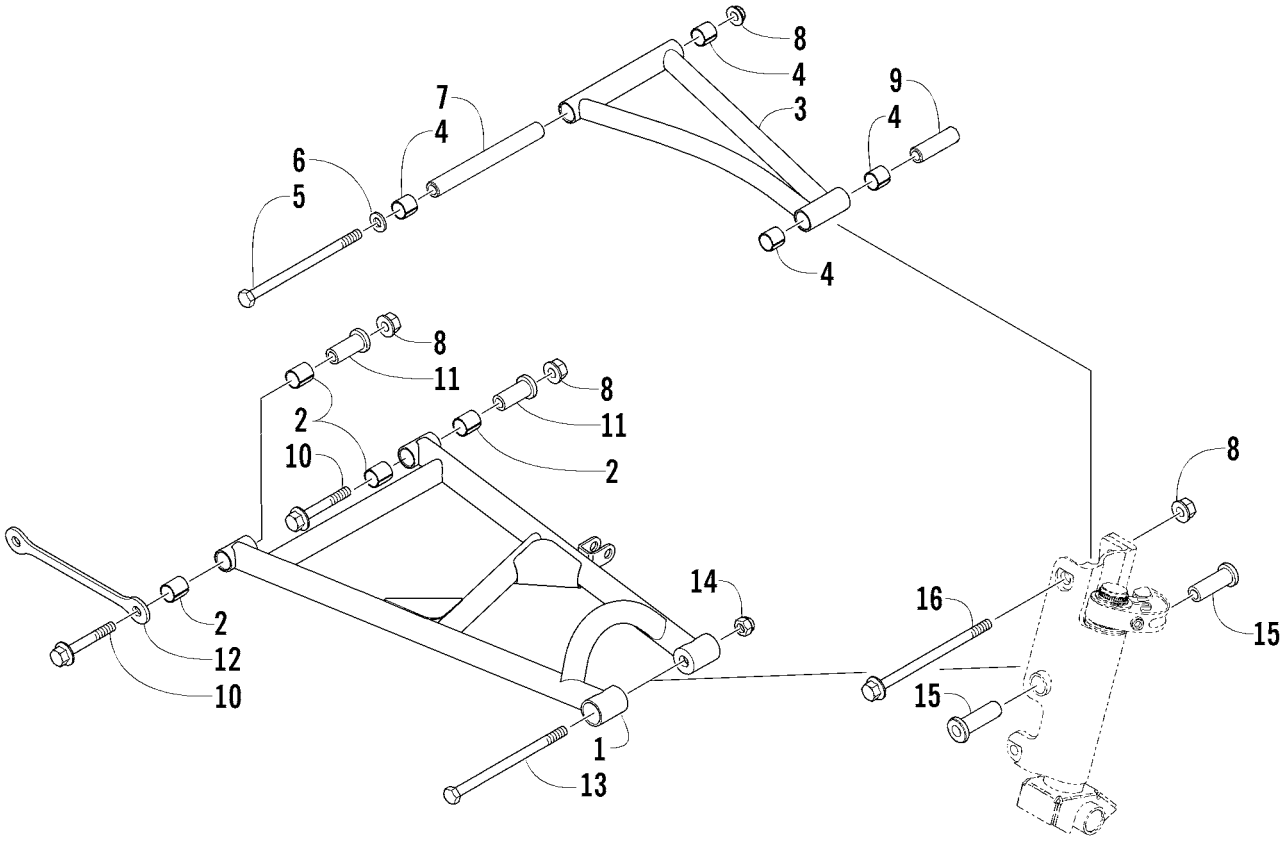

A-ARM ASSEMBLY

0739-674

Ref.	Part No.	Qty.	Description	Ref.	Part No.	Qty.	Description
1	1703-734	1	A-Arm, Lower - Right - Black (inc. 2)	9	0603-864	2	Tube, Axle
	1703-735	1	A-Arm, Lower - Left - Black (inc. 2)	10	8020-230	4	Screw, Cap
2	1603-895	8	● Bearing	11	2603-179	4	Axle, Inner - Lower Arm
3	1703-426	2	A-Arm, Upper - Black (inc. 4)	12	2606-886	1	Brace, Lower A-Arm
4	0603-083	8	● Bearing	13	1623-009	2	Screw, Cap
5	0623-952	2	Screw, Cap	14	8040-546	2	Nut, Lock
6	0623-664	4	Washer	15	1603-616	4	Axle, Powder Metal
7	1603-563	2	Axle, Inner - Upper Arm	16	8026-232	2	Screw, Cap
8	8048-486	8	Nut, Lock				

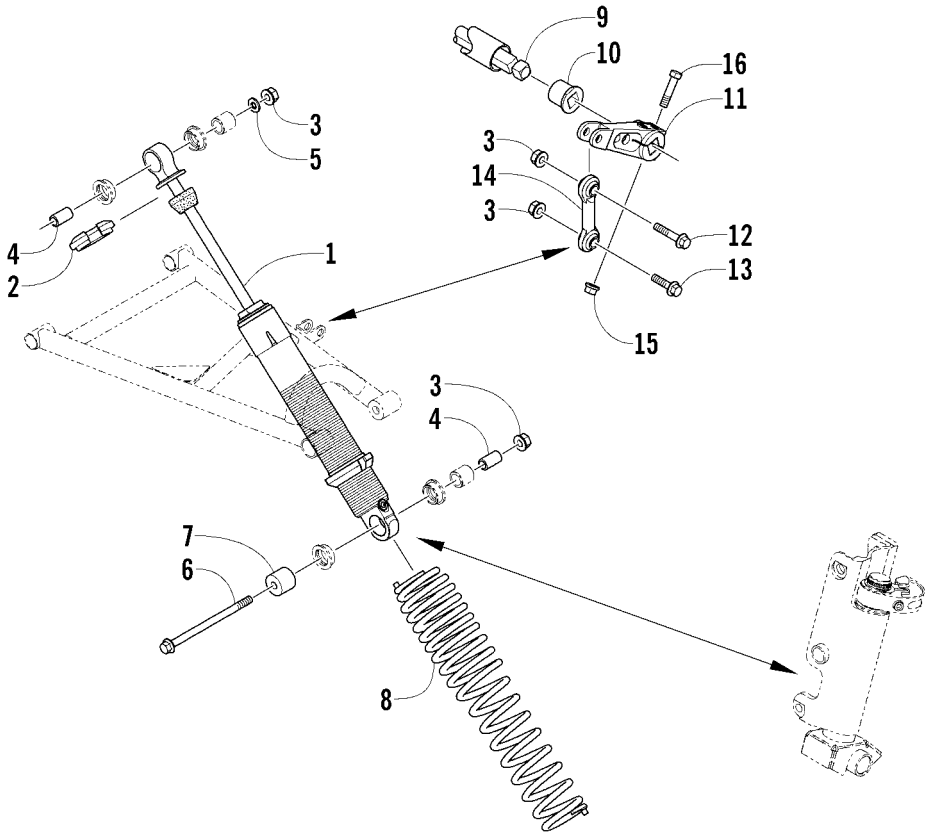

SHOCK ABSORBER AND SWAY BAR ASSEMBLY

0739-678

Ref.	Part No.	Qty.	Description	Ref.	Part No.	Qty.	Description
1	1703-795	2	Shock, Ski	9	1703-616	1	Sway Bar
2	1603-890	2	Retainer, Spring	10	1603-211	2	Bearing
3	8048-486	8	Nut, Lock	11	2603-307	2	Arm, Sway Bar
4	1603-023	4	Sleeve, Shock	12	8020-226	2	Screw, Cap
5	0623-991	2	Washer	13	8020-225	2	Screw, Cap
6	8020-232	2	Screw, Cap	14	1603-002	2	Link, Sway Bar
7	0603-648	2	Spacer, Shock Mount	15	8048-426	4	Nut, Lock
8				16	8002-137	4	Screw, Cap
	2603-304	2	Spring, Compression - Silver				

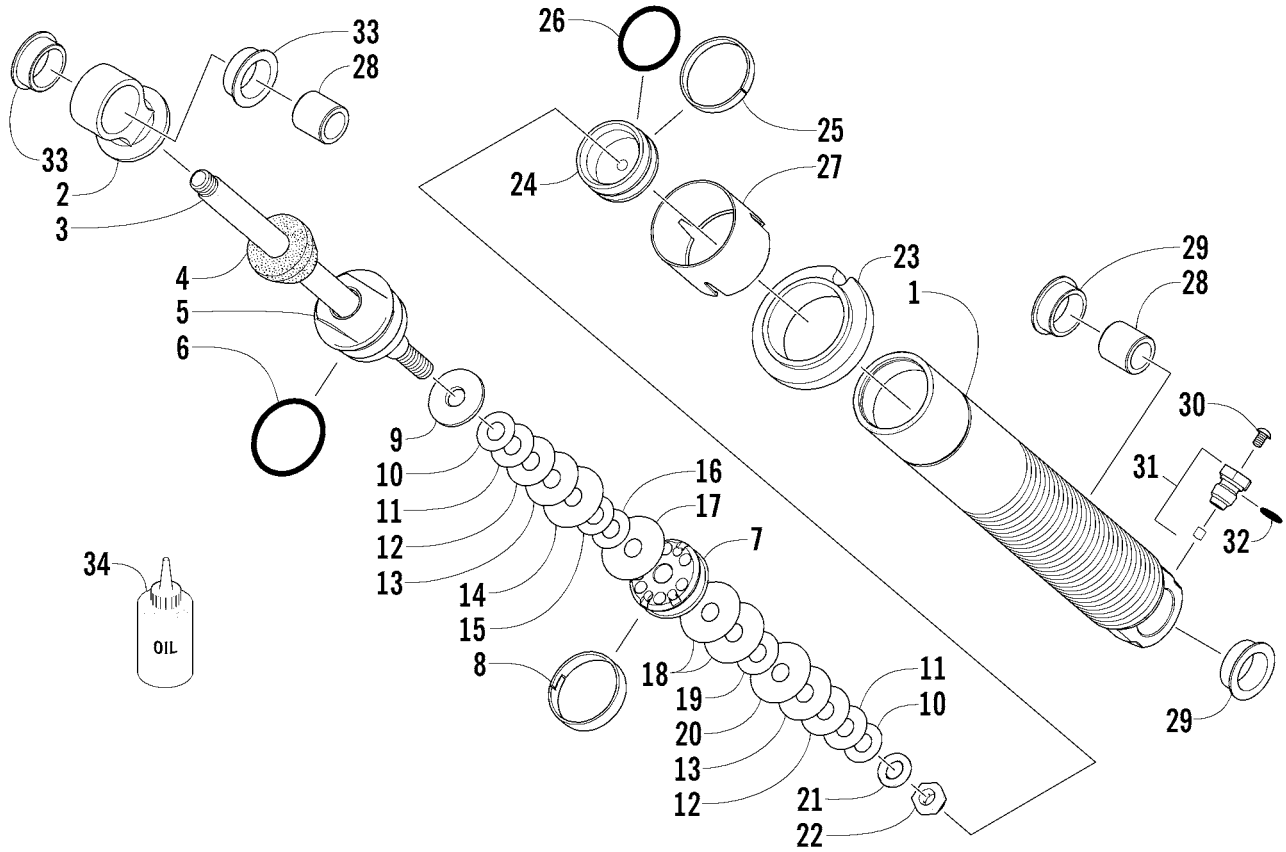

FRONT SUSPENSION SHOCK ABSORBER

(Complete Shock Absorber p/n 1703-795)

0738-644

Ref.	Part No.	Qty.	Description	Ref.	Part No.	Qty.	Description
1	2603-262	1	Body, Shock	18	2603-122	2	Valve, 1.250 x 0.006 in.
2	1603-501	1	Eyelet, Shock	19	2603-062	1	Valve, 0.900 x 0.006 in.
3	2603-461	1	Rod, Shock	20	2603-125	1	Valve, 1.250 x 0.010 in.
4	0603-991	1	Bumper, Shock	21	1604-273	1	Washer, Backup
5	1703-452	1	Cap, Shock (inc. 6)	22	0623-696	1	Nut, Lock
6	1604-271	1	● O-Ring	23	1603-911	1	Nut, Adjuster
7	1603-996	1	Piston, 0.120 in. - Orifice	24	0704-791	1	Piston, Floating (inc. 25-26)
8	1604-274	1	Strap, Piston - Teflon	25	2604-153	1	● Strap, Piston - Teflon
9	1604-272	1	Washer, Top Out	26	2604-152	1	● O-Ring
10	2603-055	2	Valve, 0.800 x 0.010 in.	27	2603-012	1	Sleeve, Protector
11	2603-065	2	Valve, 0.900 x 0.010 in.	28	1603-209	2	Sleeve, Eyelet
12	2603-075	2	Valve, 1.000 x 0.010 in.	29	1603-914	2	Bushing, Shock
13	2603-095	2	Valve, 1.100 x 0.010 in.	30	0624-433	1	Screw, Valve
14	2603-124	1	Valve, 1.250 x 0.008 in.	31	2604-649	1	Valve, Pressure (inc. 32)
15	2603-047	1	Valve, 0.700 x 0.015 in.	32	2604-162	1	● O-Ring, Valve
16	2603-052	1	Valve, 0.800 x 0.006 in.	33	0603-955	2	Bushing, Shock
17	2603-132	1	Valve, 1.300 x 0.006 in.	34	2639-151	AR	Oil, Gas Shock - 6 qt Case

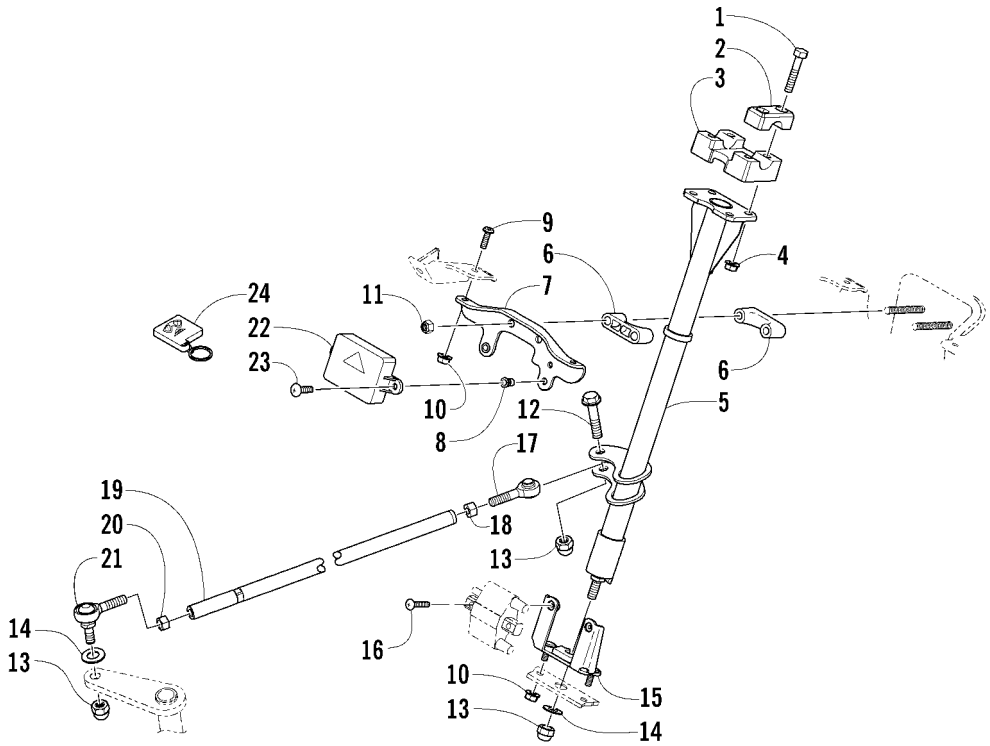

STEERING POST ASSEMBLY

0738-711

Ref.	Part No.	Qty.	Description	Ref.	Part No.	Qty.	Description
1	8002-137	4	Screw, Cap	13	0623-025	3	Nut, Lock
2	0605-506	2	Cap, Adjusting Block	14	0623-044	2	Washer
3	0605-507	1	Block, Adjusting	15	0705-947	1	Stop, Steering Post
4	8048-426	4	Nut, Lock	16	8017-402	2	Screw, Machine
5	0705-844	1	Post, Steering	17	0605-504	1	Ball Joint, Tie Rod - Right
6	0605-576	2	Block, Mounting - Steering Post	18	0623-294	1	Nut, Hex - Right
7				19	0605-672	1	Tube, Tie Rod
	0705-934	1	Plate, Retaining (inc. 8)	20	0123-917	1	Nut, Hex - Left
8	0623-779	2	● Insert	21	0605-511	1	Ball Joint, Tie Rod - Left
9	8017-581	2	Screw, Machine	22	0630-149	1	Module, Control - Remote Starter
10	8048-366	4	Nut, Lock	23	0623-902	2	Screw, Machine
11	8040-426	2	Nut, Lock	24	0630-146	1	Control, Remote
12	8004-225	1	Screw, Cap				

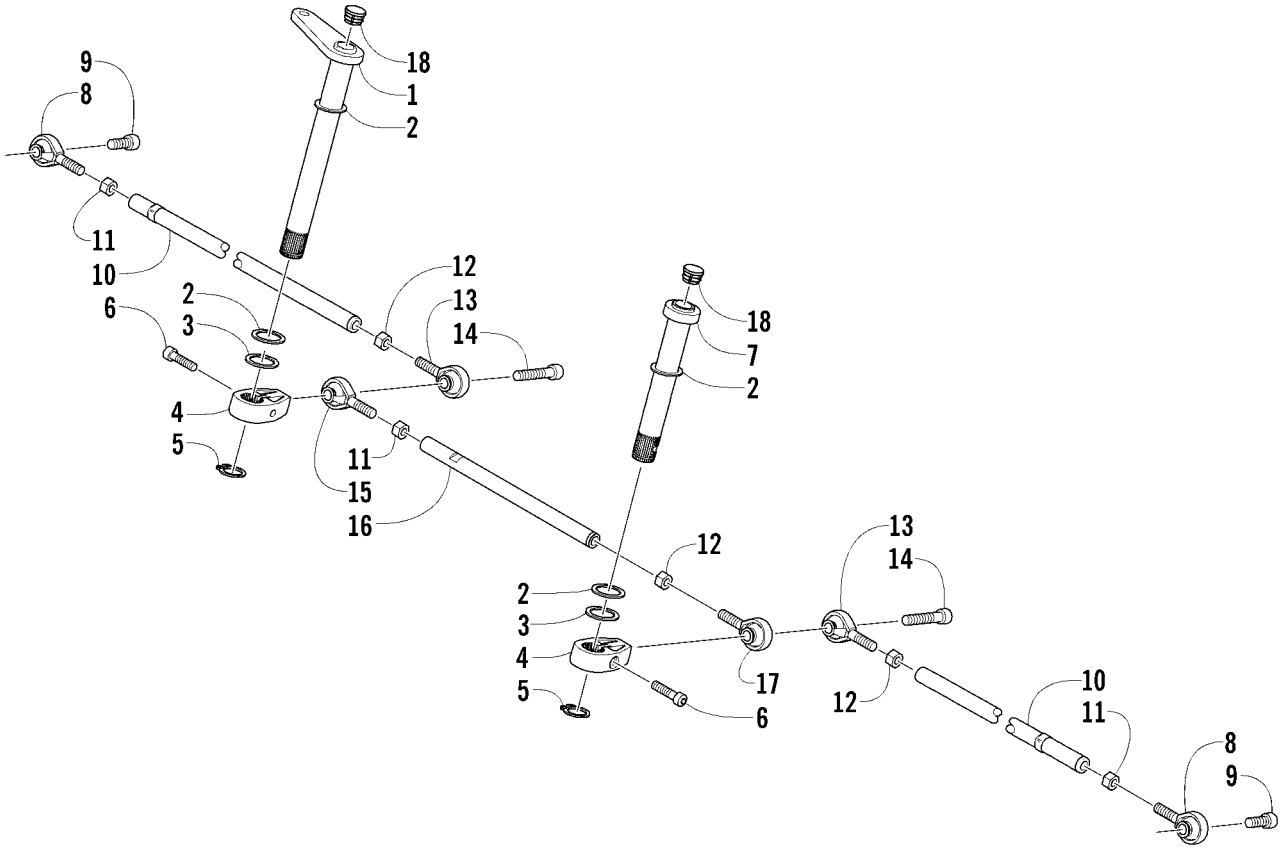

TIE ROD ASSEMBLY

0739-679

Ref.	Part No.	Qty.	Description	Ref.	Part No.	Qty.	Description
1	0705-397	1	Shaft, Steering	10	0605-673	2	Tube, Tie Rod - Spindle
2	0623-954	4	Washer, Thrust	11	0123-917	3	Nut, Hex - Left
3	0623-955	2	Washer, Thrust	12	0623-294	3	Nut, Hex - Right
4	0605-635	2	Arm, Shaft	13	0605-608	2	Ball Joint, Tie Rod - Right
5	0623-956	2	Snap Ring	14	0623-957	2	Screw, Cap
6	8005-584	2	Screw, Cap	15	0605-605	1	Ball Joint, Tie Rod - Left
7	1705-045	1	Shaft, Idler	16	0605-312	1	Tube, Tie Rod
8	0605-607	2	Ball Joint, Tie Rod - Left	17	0605-606	1	Ball Joint, Tie Rod - Right
9	1623-176	2	Screw, Cap	18	1606-079	2	Plug

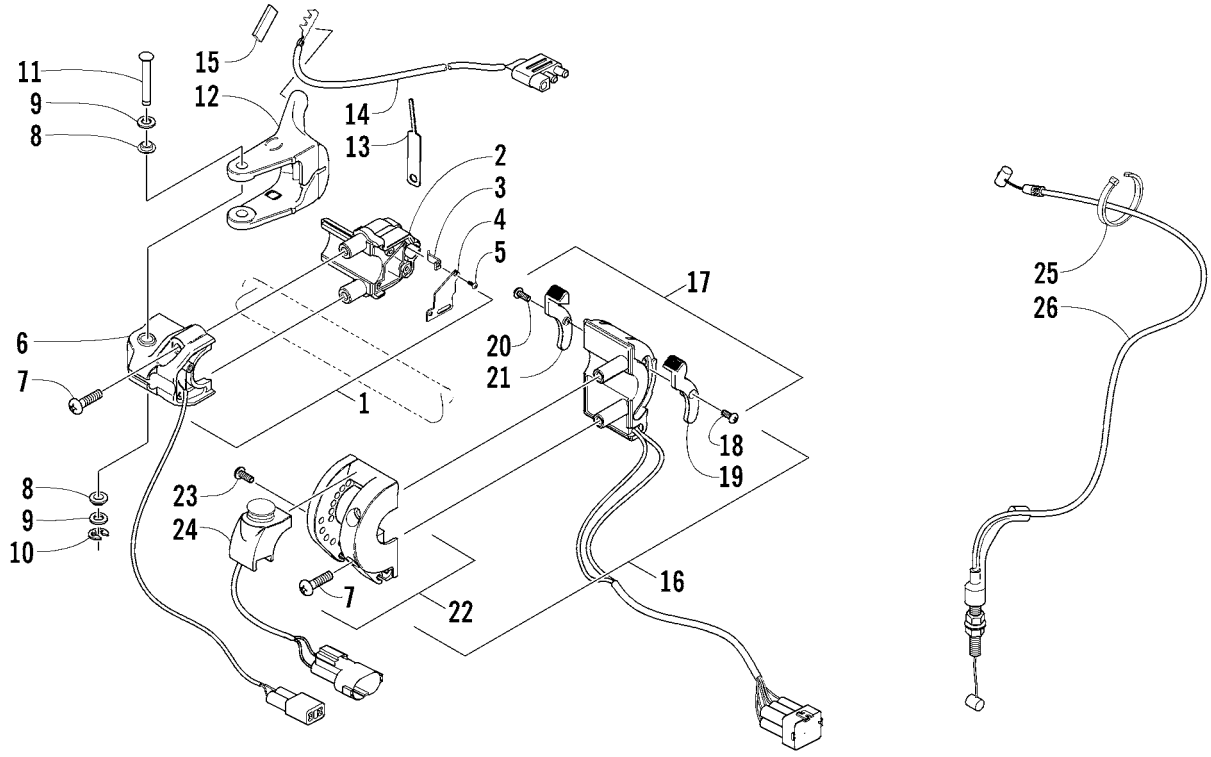

CONTROL ASSEMBLY

0739-778 *Not a Service Part

Ref.	Part No.	Qty.	Description	Ref.	Part No.	Qty.	Description
1	0609-632	1	Control, Throttle - Assembly (inc. 2-6 and two No. 7)	14	0609-667	1	Element, Thumbwarmer
				15	0617-248	1	Pad, Insulator
2	0609-576	1	● Control, Housing Half (inc. 3-5)	16	0609-628	1	Control, Stop Switch/Warmer - Assembly (inc. two No. 7 and 17-24)
3	0609-611	1	● ● Clip, Retaining				
4	0609-615	1	● ● Plate	17	0609-636	1	● Control, Warmer Half (inc. 18-21)
5	0609-612	2	● ● Screw, Self-Tapping	18	0609-605	1	● ● Screw, Machine
6	0609-633	1	● Control, Switch Half	19	0609-573	1	● ● Knob, Handwarmer
7	0609-604	4	● Screw, Machine	20	0609-606	1	● ● Screw, Machine
8	0609-501	2	Seal, Throttle Lever	21	0609-572	1	● ● Knob, Thumbwarmer
9	0609-036	2	Washer	22	0609-635	1	● Control, Stop Switch Half (inc. 23-24)
10	0609-040	1	E-Ring	23	0609-607	2	● ● Screw, Machine
11	0609-577	1	Axle, Lever - Throttle	24	*	1	● ● Switch, Stop
12	0609-565	1	Lever, Throttle	25	0123-788	AR	Cable Tie - 8 in.
13	1639-963	1	Tool, Removal - Kit - Throttle Cable	26	0687-155	1	Cable, Throttle

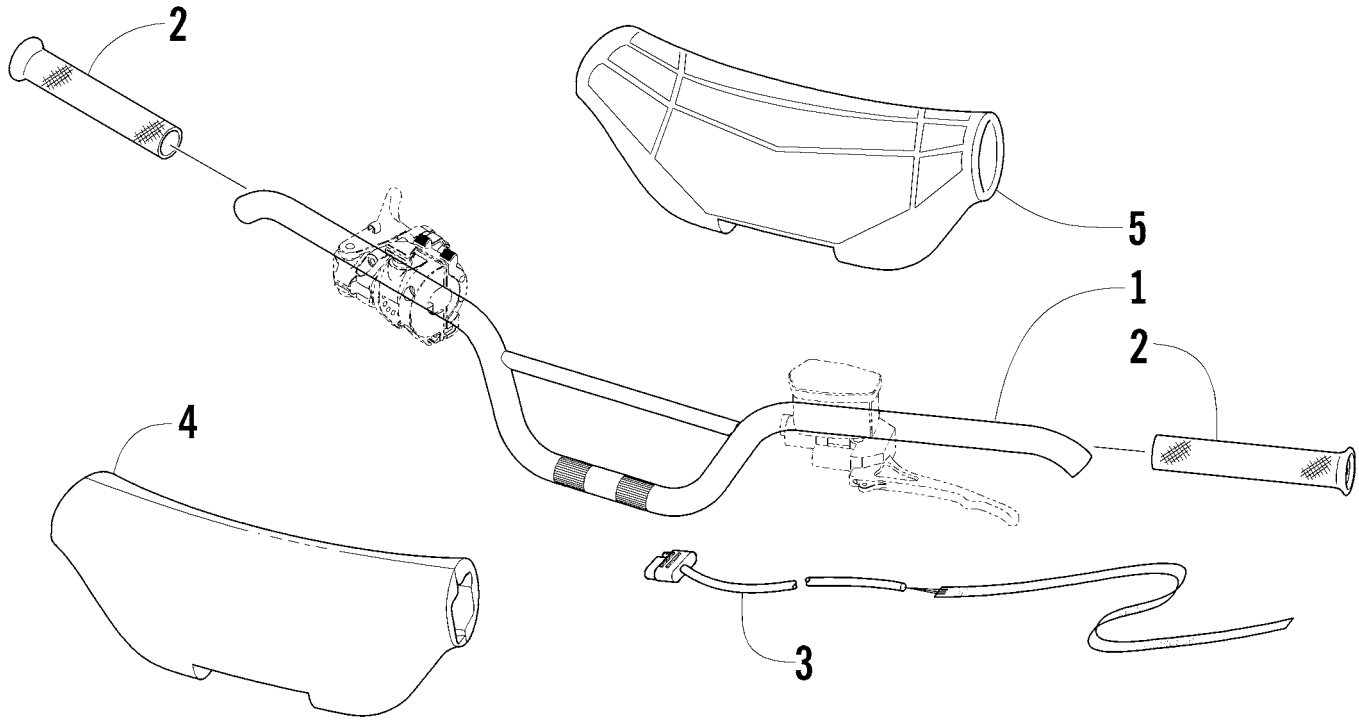

HANDLEBAR ASSEMBLY

0739-680

Ref.	Part No.	Qty.	Description	Ref.	Part No.	Qty.	Description
1	0705-846	1	Handlebar	4	0605-611	1	Pad, Handlebar
2	1606-442	2	Grip, Handlebar	5	0705-954	1	Wrap, Handlebar Pad
3	0609-668	1	Element, Handwarmer - Right				
	0609-670	1	Element, Handwarmer - Left				

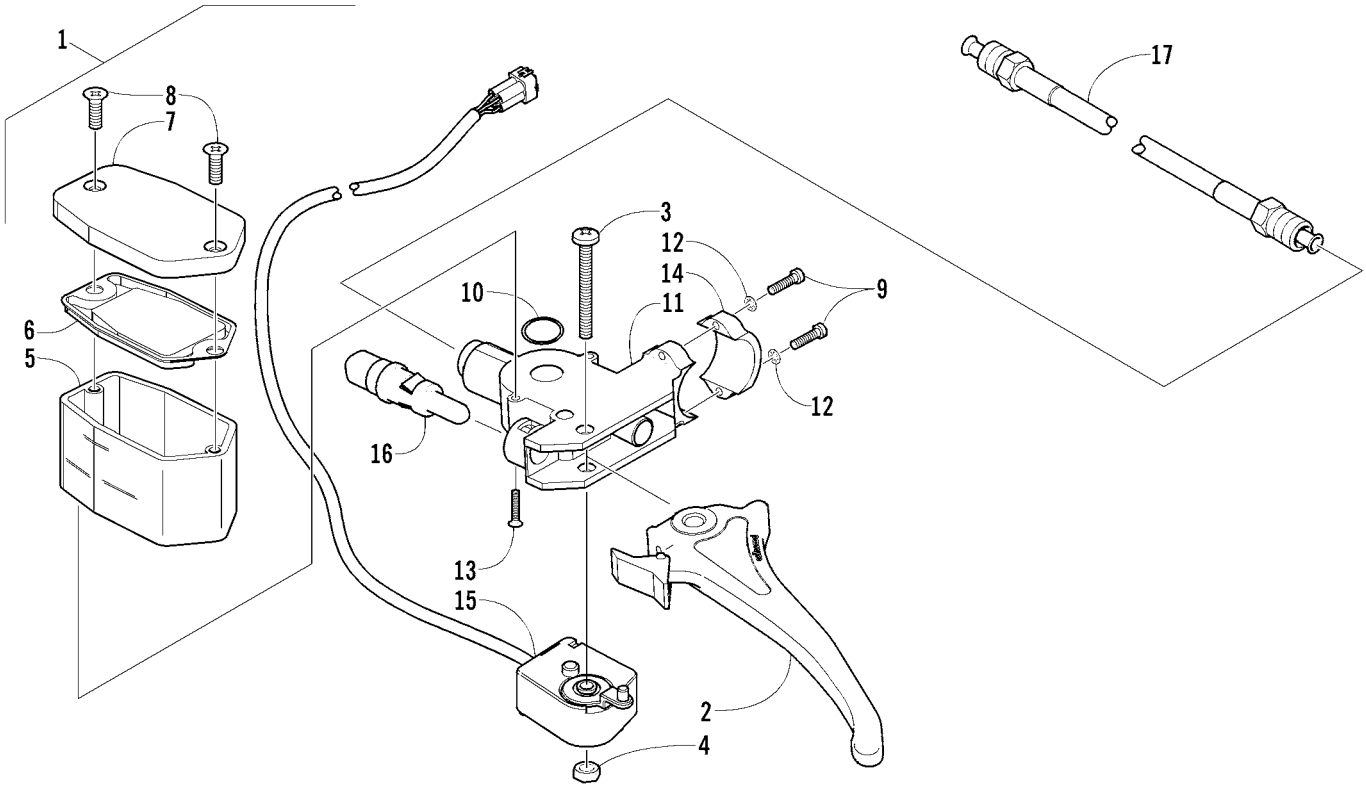

HYDRAULIC BRAKE CONTROL ASSEMBLY

0738-179 *Not a Service Part **Not Illustrated

Ref.	Part No.	Qty.	Description	Ref.	Part No.	Qty.	Description
1	1602-364	1	Brake Assembly (inc. 2-14)	10	0602-587	1	● O-Ring
2	1602-363	1	● Lever, Brake	11	*	1	● Master Cylinder
3	1623-027	1	● Screw, Lever Mounting	12	8052-212	2	● Washer, Lock - Internal Tooth
4	0623-056	1	● Nut, Lock	13	0623-432	2	● Screw, Master Cylinder Mounting
5	0602-740	1	● Reservoir	14	0602-907	1	● Clamp, Master Cylinder
6	0602-741	1	● Gasket, Cover	**	0638-315	AR	Fluid, Brake - High Temperature
7	0602-742	1	● Cover, Reservoir	15	0609-629	1	Switch, Dimmer/Brakelight
8	0623-506	2	● Screw, Cover	16	0609-637	1	Spring Assembly, Dimmer/Brakelight
9	0623-613	2	● Screw, Machine	17	1602-488	1	Brakeline, Hydraulic

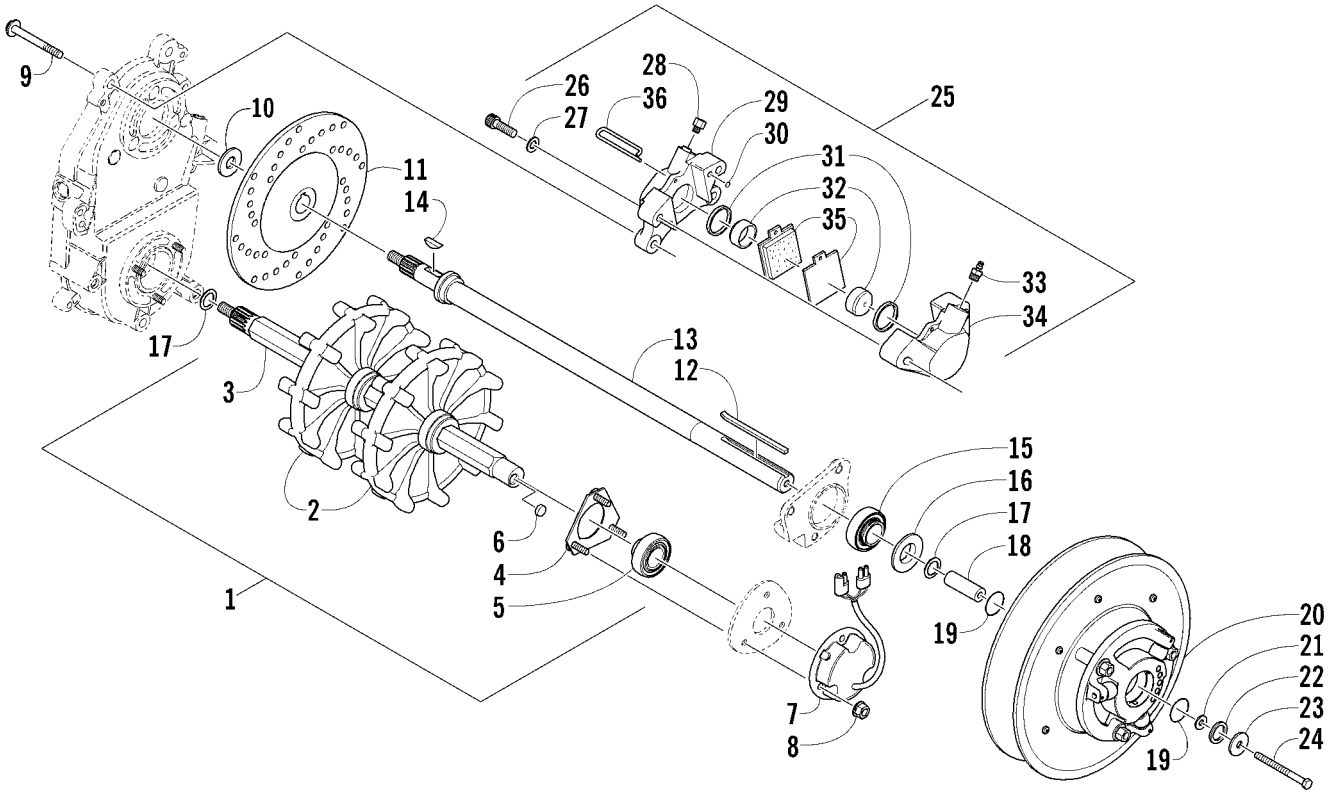

DRIVE TRAIN SHAFTS AND BRAKE ASSEMBLIES

0739-675 *Not a Service Part

Ref.	Part No.	Qty.	Description
1			
	0728-114	1	Track Drive Assembly (inc. 2-6)
2	1602-510	2	● Sprocket, Drive
3			
	1602-551	1	● Driveshaft
4	0702-412	1	● Plate, Flange
5	1602-374	1	● Bearing, 1 in. w/o Lock Collar
6	0630-167	1	● Magnet
7			
	0630-166	1	Regulator, Voltage
8	8048-426	3	Nut, Lock
9	8020-315	2	Screw, Cap
10	0623-912	AR	Washer
11	1602-205	1	Disc, Brake
12	0101-076	1	Key
13	0702-506	1	Shaft, Driven (inc. 14-16)
14	0602-598	1	● Key
15	1602-233	1	● Bearing, 1 in. w/o Lock Collar
16	1602-367	1	● Spacer
17	0623-118	AR	Washer
	0623-119	AR	Washer
18	0648-042	1	Shaft, Stub
19	0616-032	2	O-Ring
20	0726-182	1	Clutch, Driven
21	0123-053	AR	Washer
22	0123-694	AR	Washer
23	0123-019	1	Washer
24	8002-139	1	Screw, Cap
25	0602-829	1	Caliper, Brake Assembly (inc. 26-36)
26	8005-677	2	● Screw, Cap
27	8050-272	2	● Washer
28	0602-590	1	● Fitting, Adapter
29	*	1	● Housing
30	0602-729	1	● O-Ring, Housing
31	0602-583	2	● O-Ring
32	0602-708	2	● Piston
33	0602-707	1	● Screw, Bleed - Assembly
34	*	1	● Housing
35	0702-229	1	● Pad, Brake - Set (inc. 36)
36	0602-706	1	● ● Pin, Retaining

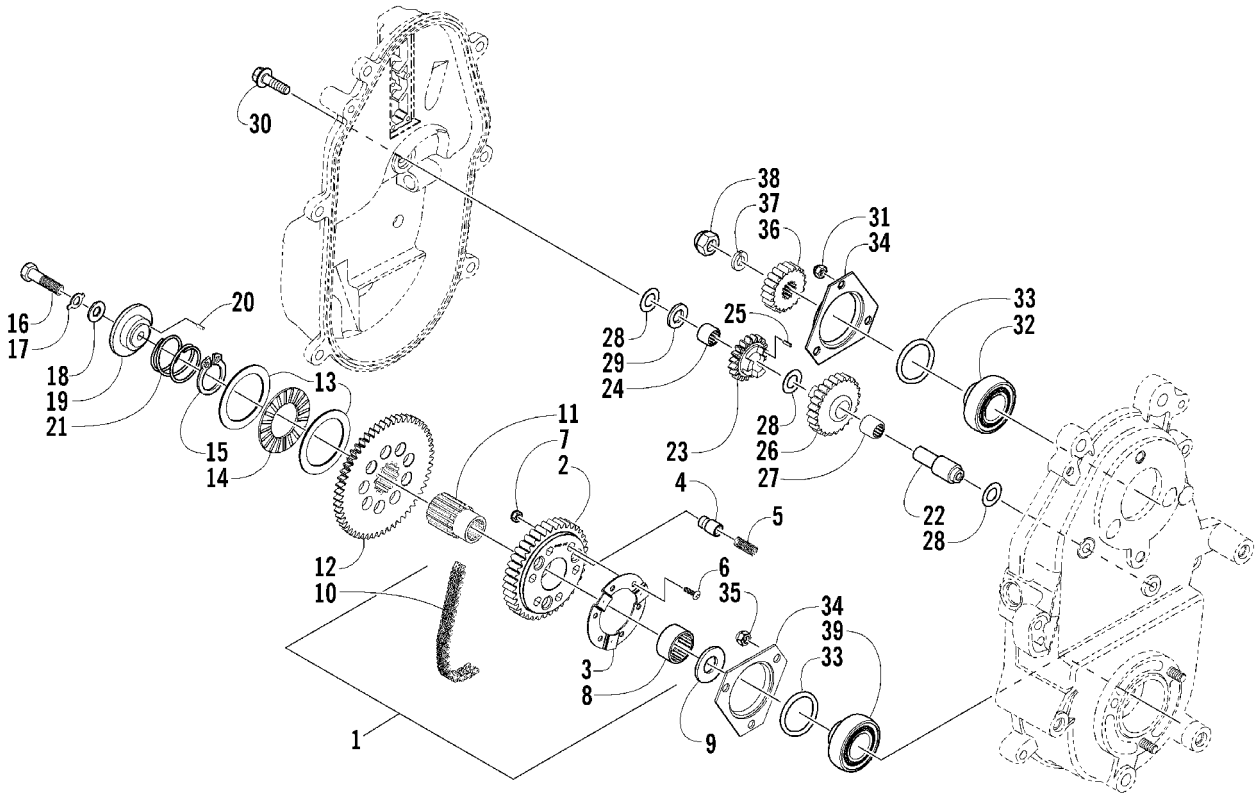

DRIVE/REVERSE DROPCASE ASSEMBLY

0738-683 *Not a Service Part

Ref.	Part No.	Qty.	Description	Ref.	Part No.	Qty.	Description
1				22	0602-872	1	Shaft, Reverse
	0702-633	1	Sprocket Assembly - 40T (inc. 2-8)	23	0702-365	1	Idler, Reverse - Assembly - 19T (inc. 24)
				24	1602-045	1	● Bearing
2	*	1	● Sprocket	25	0602-366	1	Aligner, Idler - Pin
3	0602-144	1	● Retainer, Spring	26			
4	0602-133	3	● Pin, Slip		0702-322	1	Idler, Reverse - 24T (inc. 27)
5	0602-138	3	● Spring, Compression				
6	0623-182	6	● Screw, Cap	27	0602-205	1	● Bearing, Caged
7	0123-430	6	● Nut, Lock	28	0602-215	3	Spacer, Reverse Idler
8	0602-016	1	● Bearing	29	1602-044	1	Washer, Thrust
9	0602-012	1	Spacer, Shaft	30	8020-130	1	Screw, Cap
10	1602-042	1	Chain - 72P	31	8041-426	3	Nut, Lock
11	1602-048	1	Extension, Driveshaft	32	1602-052	1	Bearing, 7/8 in.
12	0702-048	1	Gear, Reverse - 55T (inc. 13-15)	33	0107-003	2	Seal, O-Ring
13	0602-023	2	● Washer, Thrust	34	1602-521	2	Plate, Flange
14	0602-022	1	● Bearing, Thrust	35	8040-426	3	Nut, Lock
15	0602-024	1	● Ring, Retaining	36			
16	8002-231	1	Screw, Cap		0602-455	1	Sprocket - 22T
17	1602-046	1	Washer, Tab Lock				
18	8050-272	1	Washer	37	0623-231	1	Washer, Spring
19	0702-372	1	Retainer, Shaft (inc. 20)	38	0623-465	1	Nut, Lock
20	8070-153	1	● Pin, Spring	39	1602-051	1	Bearing, 1 in.
21	0602-028	1	Spring, Return				

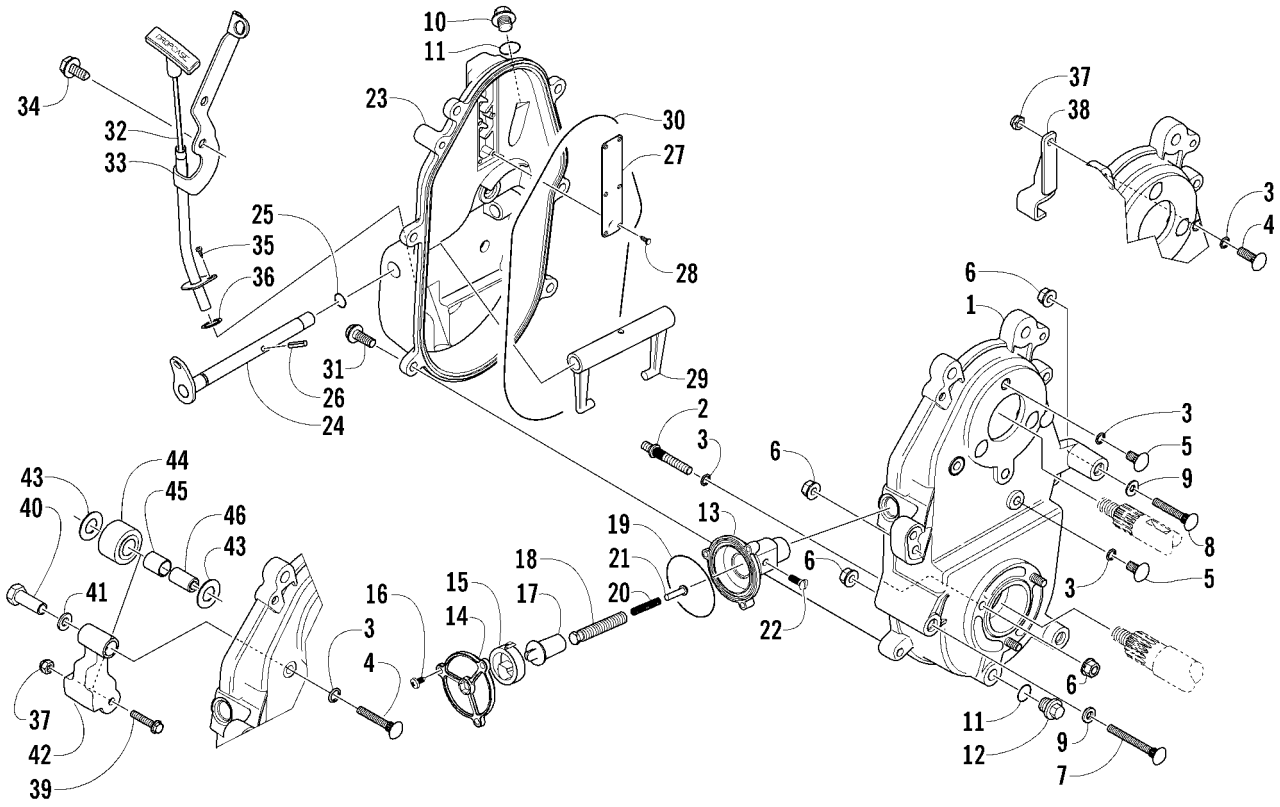

DROPCASE AND CHAIN TENSION ASSEMBLY

0739-863

Ref.	Part No.	Qty.	Description	Ref.	Part No.	Qty.	Description
1	0702-417	1	Dropcase w/Studs (inc. 2-5)	25	0602-021	1	Seal, O-Ring
2	0623-317	3	● Stud, Ribbed	26	0623-542	1	Pin, Spring
3	0607-025	9	● O-Ring, Stud	27	1602-151	1	Cover, Oil Vent
4	0623-117	2	● Bolt, Ribbed	28	0623-081	6	Screw, Self-Tapping
5	0123-523	4	● Bolt, Ribbed	29	0602-085	1	Fork, Shift
6	8047-426	7	Nut, Lock	30	0602-437	1	Seal, Dropcase
7	1623-121	1	Bolt, Carriage	31	8020-134	5	Screw, Cap
8	8011-139	2	Bolt, Carriage	32	1602-533	1	Stick, Oil Level
9	8050-252	AR	Washer	33	0702-537	1	Tube, Oil Level Stick
10	0623-293	2	Plug, Drain	34	0623-765	1	Screw, Self-Tapping
11	1602-213	3	O-Ring	35	0623-914	1	Screw, Self-Tapping
12	0602-479	1	Plug, Drain - Magnetic	36	0605-014	1	O-Ring, Oil Level Stick Tube
13	0602-746	1	Housing, Screw - Chain Adjuster	37	0623-122	2	Nut, Lock
14	0602-645	1	Cover, Adjuster Housing	38			
15	0602-803	1	Spring, Power - Adjuster Shaft		0602-466	1	Bracket, Chain Backing
16	0623-526	3	Screw, Self-Tapping				
17	1602-536	1	Shaft, Chain Adjuster	39	8002-045	1	Screw, Cap
18	0602-748	1	Screw, Chain Adjuster	40	0602-681	1	Nut, Roller Arm
19	0602-801	1	O-Ring, Cover - Chain Adjuster	41	8050-222	1	Washer
20	0602-901	1	Spring, Compression	42	0602-675	1	Arm, Chain Roller
21	0602-804	1	Rivet, Button Head	43	0623-525	2	Washer
22	0623-541	1	Screw, Machine	44	0702-129	1	Roller, Chain Tightener (inc. 45)
23	1602-221	1	Cover, Dropcase	45	0602-383	1	● Bearing, Chain Tightener
24	0702-291	1	Shaft, Shift Fork	46	0602-676	1	Shaft, Chain Roller

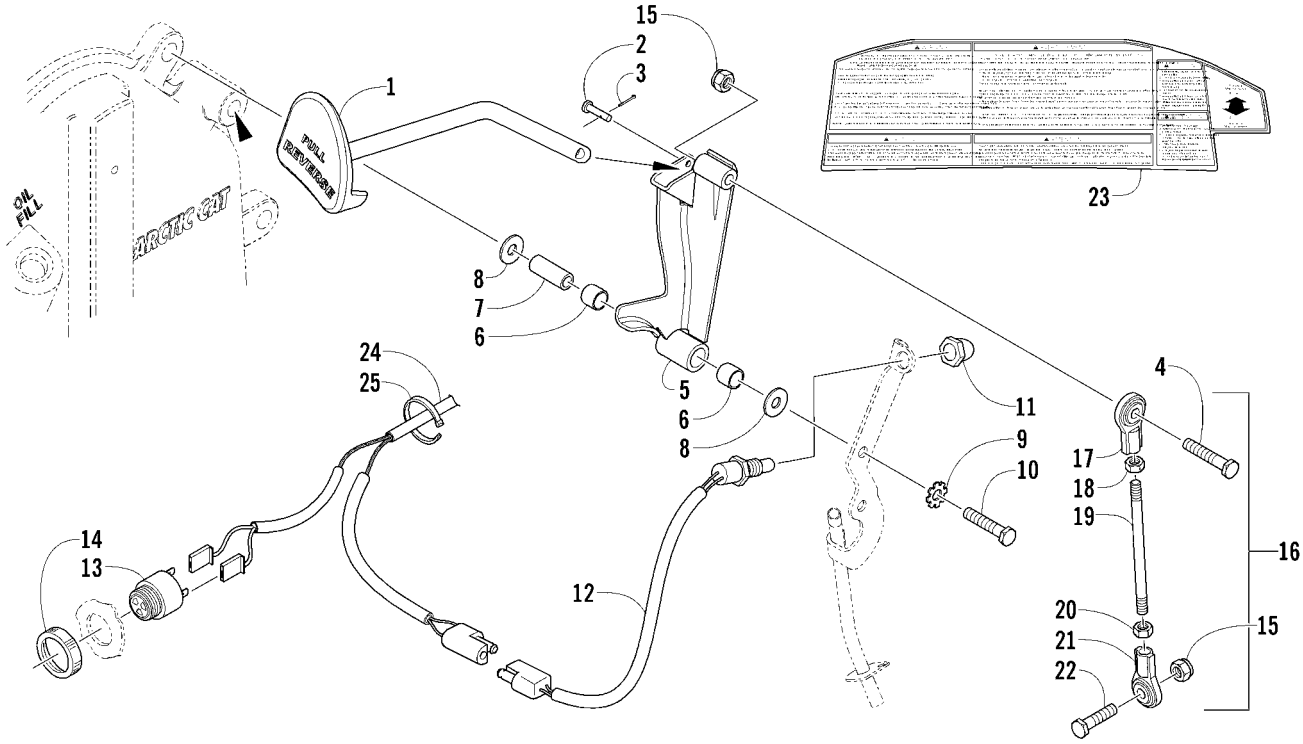

REVERSE SHIFT LEVER ASSEMBLY

(Optional Kit p/n 3639-013)

0738-714 *Not a Service Part **Included in Kit

Ref.	Part No.	Qty.	Description	Ref.	Part No.	Qty.	Description
1	1602-429	1	Lever	14	0630-017	1	● Ring, Retaining
2	0623-641	1	Pin, Clevis	15	8040-426	2	Nut, Lock
3	0117-868	1	Pin, Cotter	16	0702-499	1	Linkage, Shifting - Assembly (inc. 17-21)
4	8002-137	1	Screw, Cap	17	0602-305	1	● Rod End - Left
5	0702-500	1	Shift Pivot (inc. 6)	18	0623-260	1	● Nut, Jam - Left
6	0602-844	2	● Bushing	19	*	1	● Rod, Linkage
7	0602-853	1	Axle	20	0123-144	1	● Nut, Jam - Right
8	8050-247	2	Washer	21	0602-322	1	● Rod End - Right
9	8053-242	1	Washer, Lock - External Tooth	22	8002-132	1	Screw, Cap
10	8002-140	1	Screw, Cap	23	5611-483	1	Decal, Warning - General/Brake/Reverse**
11	0630-013	1	Boot, Switch	24	0686-120	1	Harness**
12	0630-011	1	Switch, Alarm	25	0123-788	AR	Cable Tie - 7.5 in.
13	0630-010	1	Alarm, Reverse (inc. 14)				

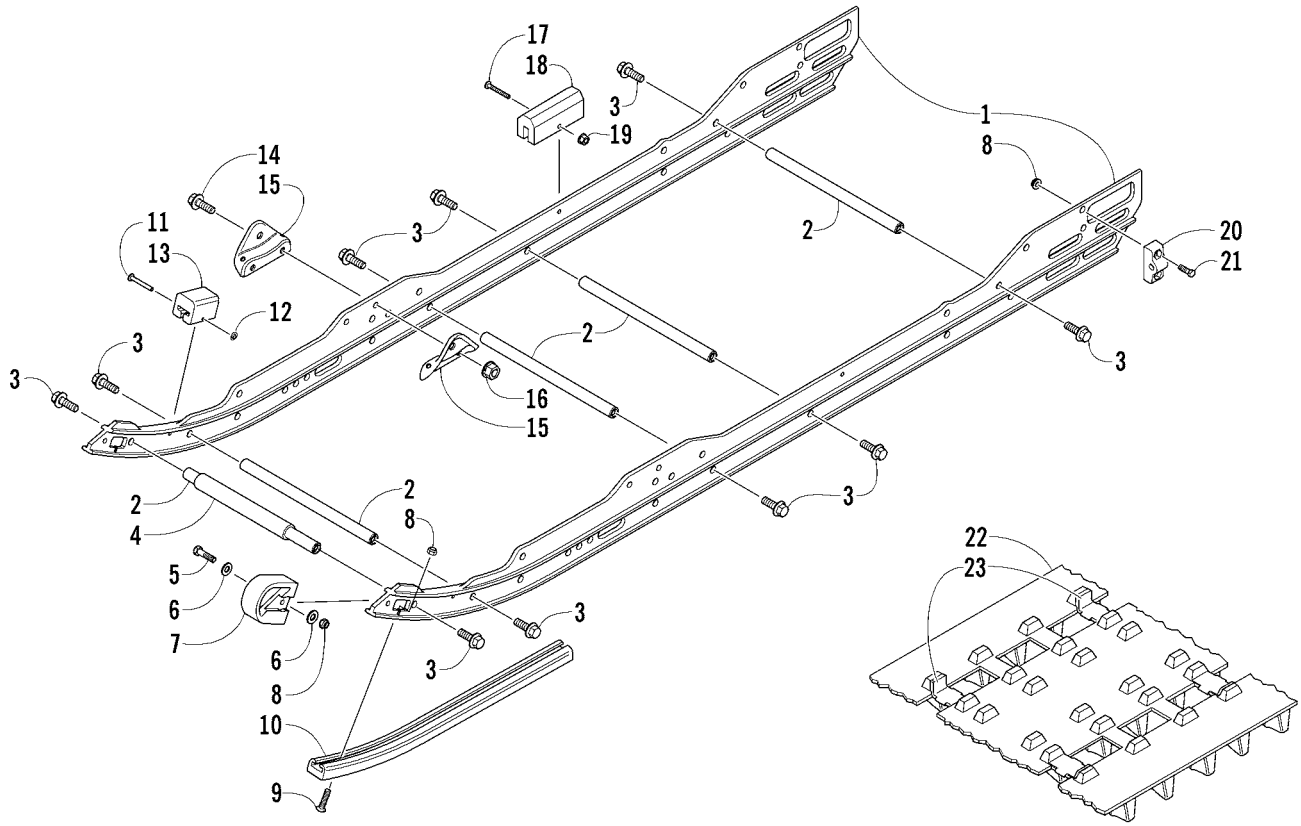

SLIDE RAIL AND TRACK ASSEMBLY

_____)

0739-683

Ref.	Part No.	Qty.	Description	Ref.	Part No.	Qty.	Description
1	2604-746	2	Rail, Formed	13	0104-631	2	Pad, Shock
2	0604-930	5	Axle, Inner	14	8020-132	4	Screw, Cap
3	1623-248	10	Screw, Cap	15	2604-593	4	Bracket, Mounting - Front Arm
4	2604-281	1	Spacer	16	8048-426	4	Nut, Lock
5	8002-043	2	Screw, Cap	17	8017-405	2	Screw, Machine
6	8050-217	4	Washer	18	1604-607	2	Pad, Shock
7	2604-842	2	End Cap, Slide Rail	19	8041-246	2	Nut, Lock
8	8047-366	8	Nut, Lock	20	0704-352	2	Adjuster, Track
9	0123-859	2	Screw, Machine	21	8002-042	4	Screw, Cap
10	2604-537	2	Wearstrip, Slide Rail	22	1602-750	1	Track Assembly (inc. 23)
11	0123-767	2	Rivet, Solid	23	1602-134	38	● Clip, Guide
12	0123-766	2	Nut, Push				

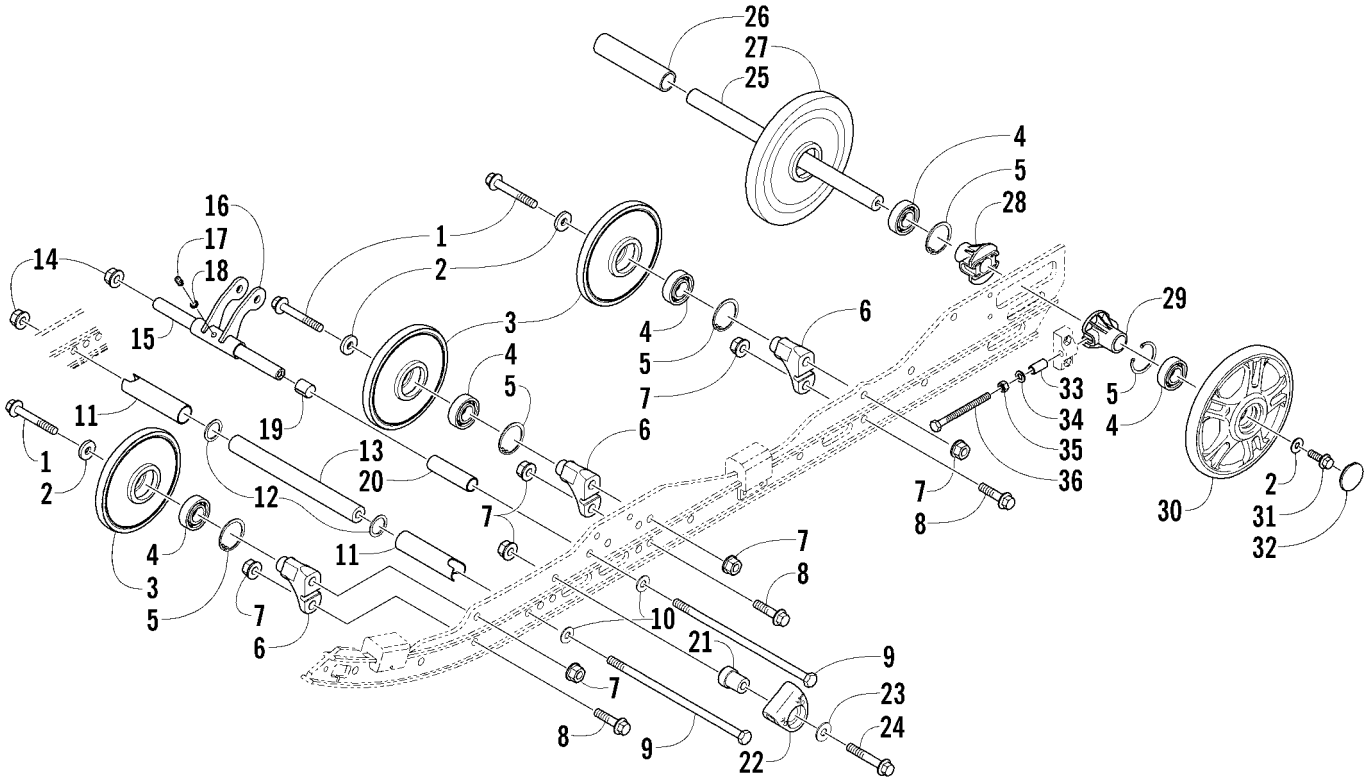

IDLER WHEEL ASSEMBLY

0739-830

Ref.	Part No.	Qty.	Description	Ref.	Part No.	Qty.	Description
1	8020-232	6	Screw, Cap	20	2604-109	2	Spacer
2	0623-664	8	Washer	21	2604-378	2	Block, Slide
3	1604-837	6	Wheel, Idler (inc. 4-5)	22	2604-515	2	Slide, Spring
4	1604-847	10	● Bearing, Wheel	23	8050-282	2	Washer
5	0623-946	10	● Ring, Retaining	24	8020-229	2	Screw, Cap
6	2604-579	6	Block, Mounting - Idler Wheel	25	2604-874	1	Axle, Rear
7	8048-486	14	Nut, Lock	26	1604-810	1	Spacer
8	8020-224	6	Screw, Cap	27	1604-839	2	Wheel, Idler (inc. 4-5)
9	1623-037	2	Screw, Cap	28	2604-881	2	Bushing, Adjuster
10	8050-272	2	Washer	29	2604-635	2	Bushing, Adjuster
11	1604-793	2	Spacer	30	2604-760	2	Wheel, Idler (inc. 4-5)
12	0623-912	2	Washer	31	1623-249	2	Screw, Cap
13	1604-792	1	Axle, Steel	32	1604-952	2	Cap, Idler Wheel
14	8047-490	2	Nut, Lock	33			
15	1604-209	1	Axle, Steel		0704-854	2	Spacer (EXT)
16	0704-994	1	Pivot, Shock (inc. 17-19)	34	8051-277	2	Washer, Lock
17	1623-010	1	● Fitting, Grease	35	8042-486	2	Nut
18	1623-011	1	● Washer, Grease Fitting	36			
19	0603-083	2	● Bearing		0623-123	2	Screw, Cap

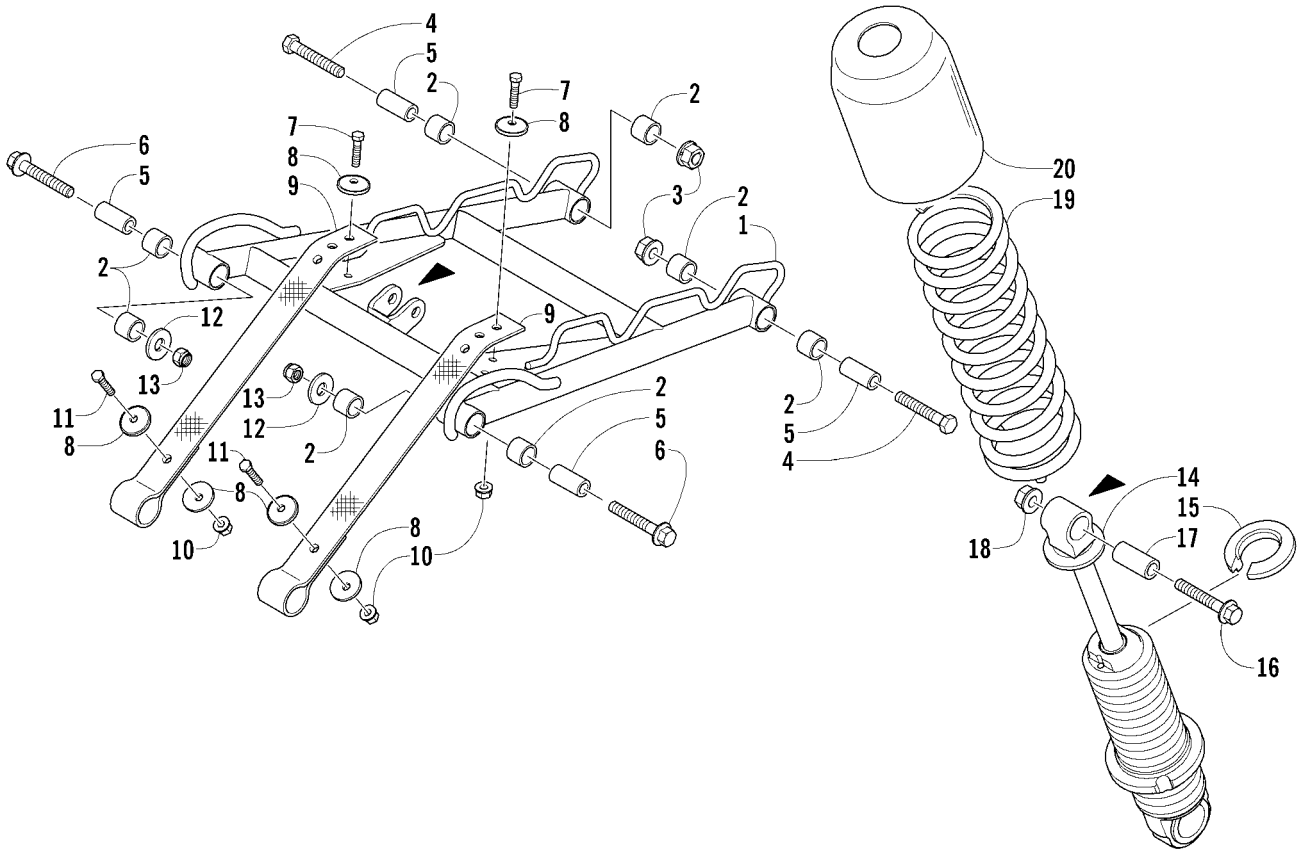

REAR SUSPENSION FRONT ARM ASSEMBLY

0739-744

Ref.	Part No.	Qty.	Description	Ref.	Part No.	Qty.	Description
1	1704-312	1	Arm, Front Suspension (inc. 2)	11	8002-045	2	Screw, Cap
2	0604-889	8	● Bushing	12	0623-044	2	Washer
3	8047-490	2	Nut, Lock	13	8040-486	2	Nut, Lock
4	8002-228	2	Screw, Cap	14	1704-116	1	Shock Absorber, Front Arm
5	0104-629	4	Spacer, Front Arm	15	1603-890	1	Retainer, Spring
6	8020-228	2	Screw, Cap	16	8020-227	1	Screw, Cap
7	8002-041	2	Screw, Cap	17	1603-531	1	Axle, Shock
8	0623-875	6	Washer	18	8048-486	1	Nut, Lock
9	_____			19	0704-523	1	Spring, Compression
	2604-836	2	Strap, Limiter	20	0604-790	1	Cover, Shock
10	8047-366	4	Nut, Lock				

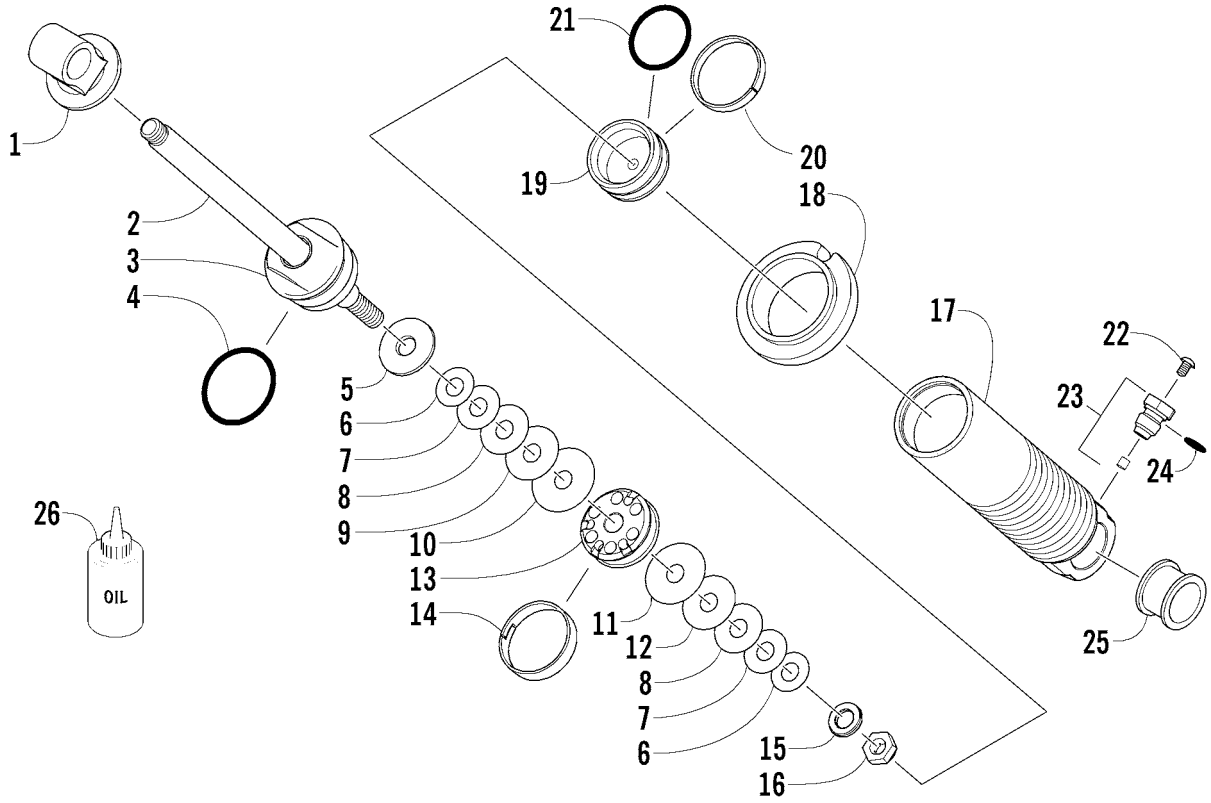

REAR SUSPENSION FRONT ARM SHOCK ABSORBER

(Complete Shock Absorber p/n 1704-116)

0738-660

Ref.	Part No.	Qty.	Description	Ref.	Part No.	Qty.	Description
1	1604-796	1	Eyelet, Shock	14	1604-274	1	Strap, Piston - Teflon
2	2604-365	1	Rod, Shock	15	1604-273	1	Washer, Backup
3	1703-453	1	Cap, Shock (inc. 4)	16	0623-696	1	Nut, Lock
4	1604-271	1	● O-Ring	17	2604-596	1	Body, Shock
5	1604-272	1	Washer, Top Out	18	1603-911	1	Nut, Spring Adjuster
6	2603-055	2	Valve, 0.800 x 0.010 in.	19	0704-791	1	Piston, Floating (inc. 20-21)
7	2603-065	2	Valve, 0.900 x 0.010 in.	20	2604-153	1	● Strap, Piston - Teflon
8	2603-075	2	Valve, 1.000 x 0.010 in.	21	2604-152	1	● O-Ring
9	2603-096	1	Valve, 1.100 x 0.012 in.	22	0624-546	1	Screw, Machine
10	2603-136	1	Valve, 1.300 x 0.012 in.	23	0704-796	1	Valve, Pressure (inc. 24)
11	2603-125	1	Valve, 1.250 x 0.010 in.	24	2604-162	1	● O-Ring, Valve
12	2603-095	1	Valve, 1.100 x 0.010 in.	25	2604-156	1	Sleeve, Shock Eyelet
13	0603-953	1	Piston, 0.093 in. - Orifice	26	2639-151	AR	Oil, Gas Shock - 6 qt Case

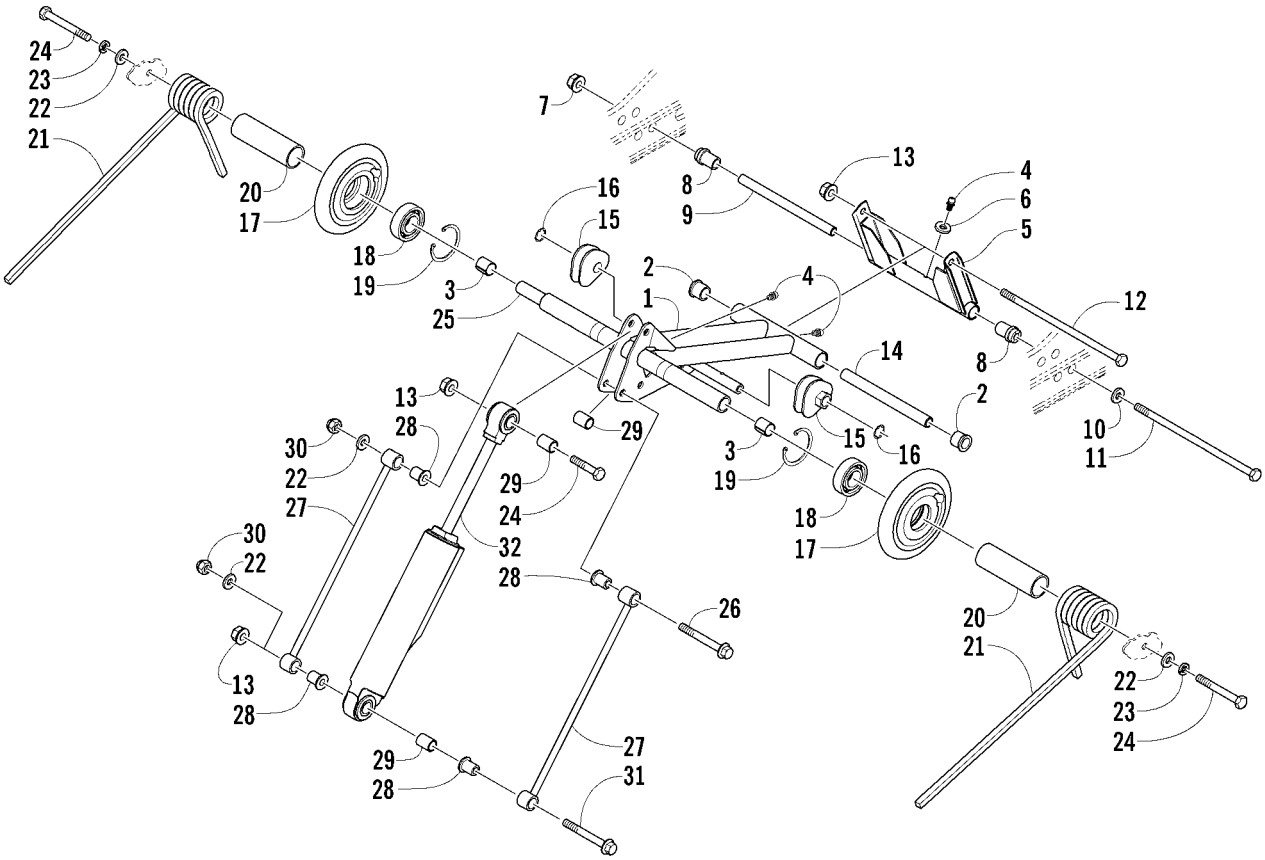

REAR SUSPENSION REAR ARM ASSEMBLY

0739-687

Ref.	Part No.	Qty.	Description	Ref.	Part No.	Qty.	Description
1	1704-005	1	Arm, Idler (inc. 2-3 and two No. 4)	18	0107-598	2	● Bearing
2	1604-100	2	● Bushing, Flared	19	0123-798	2	● Ring, Retaining
3	2604-147	2	● Bearing	20	2604-379	2	Sleeve, Spring
4	1623-010	3	● Fitting, Grease	21	0704-926	1	Spring, Suspension - Right
5	1704-019	1	Arm, Rear (inc. one No. 4 and 6)		0704-927	1	Spring, Suspension - Left
6	1623-011	1	● Washer, Grease Fitting	22			
7	8047-490	1	Nut, Lock		0623-044	4	Washer
8	2604-664	2	Bushing, Rear Arm	23	8051-277	2	Washer, Lock
9	2604-663	1	Tube, Axle	24	8002-226	3	Screw, Cap
10	8050-272	1	Washer	25	2604-139	1	Axle, Inner Carriage
11	1623-037	1	Screw, Cap	26	1623-219	1	Screw, Cap
12	1623-086	1	Screw, Cap	27	0704-361	2	Link, Rear Shock
13				28	2604-531	4	Axle, Link
	8048-486	2	Nut, Lock	29	1604-139	3	Sleeve, Shock
14	2604-370	1	Axle, Steel	30			
15	1604-204	1	Block, Spring Adjuster - Right		8041-486	2	Nut, Lock
	1604-205	1	Block, Spring Adjuster - Left	31			
16	0623-138	2	Ring, Retaining		1623-219	1	Screw, Cap
17	2604-143	2	Wheel, Idler (inc. 18-19)	32	1704-117	1	Shock Absorber - Rear Arm

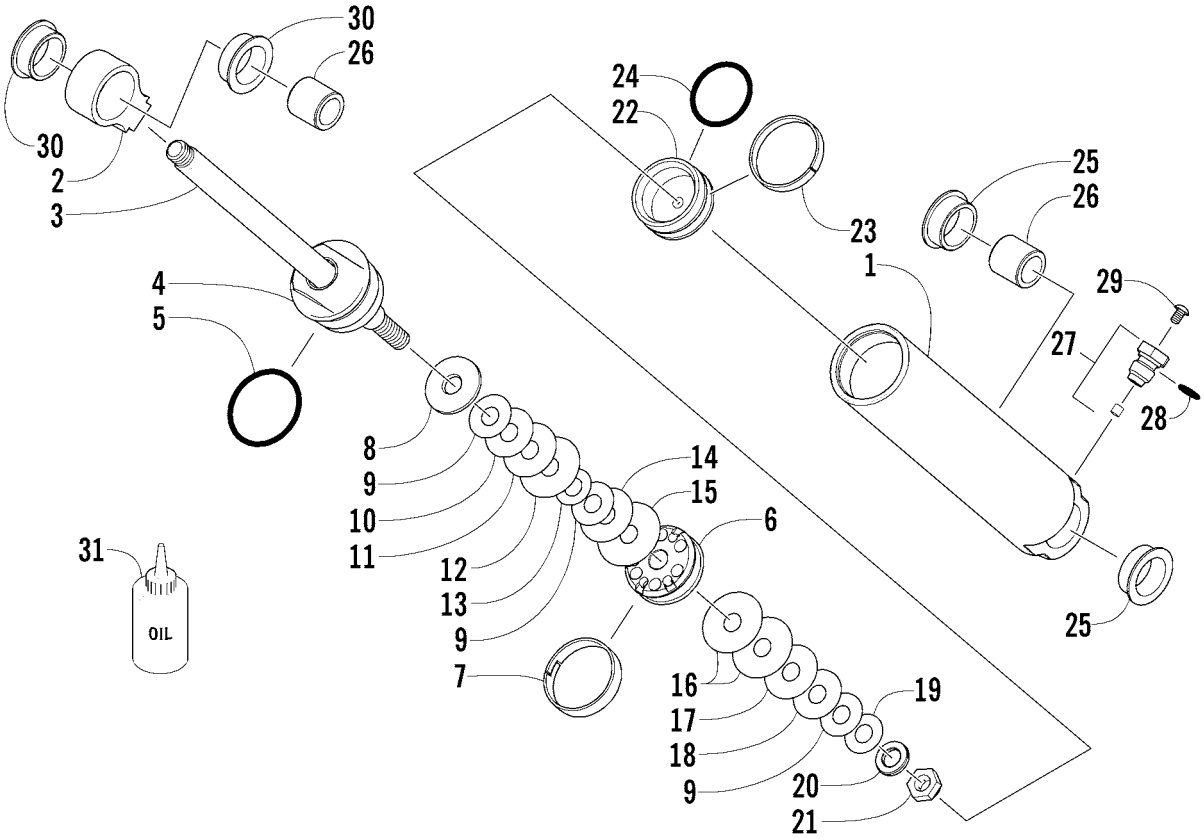

REAR SUSPENSION REAR ARM SHOCK ABSORBER

(Complete Shock Absorber p/n 1704-117)

0738-688

Ref.	Part No.	Qty.	Description	Ref.	Part No.	Qty.	Description
1	2604-598	1	Body, Shock	17	2603-096	1	Valve, 1.100 x 0.012 in.
2	1603-503	1	Eyelet, Shock	18	2603-076	1	Valve, 1.000 x 0.012 in.
3	2604-599	1	Rod, Shock	19	2603-055	1	Valve, 0.800 x 0.010 in.
4	1703-452	1	Cap, Shock (inc. 5)	20	1604-273	1	Washer, Backup
5	1604-271	1	● O-Ring	21	0623-696	1	Nut, Lock
6	1603-314	1	Piston, 0.039 in. - Orifice	22	0704-791	1	Piston, Floating (inc. 23-24)
7	1604-274	1	Strap, Piston - Teflon	23	2604-153	1	● Strap, Piston - Teflon
8	1604-272	1	Washer, Top Out	24	2604-152	1	● O-Ring
9	2603-065	3	Valve, 0.900 x 0.010 in.	25	2604-164	2	Bushing, Shock
10	2603-075	1	Valve, 1.000 x 0.010 in.	26	1604-397	2	Sleeve, Eyelet
11	2603-095	1	Valve, 1.100 x 0.010 in.	27	0704-796	1	Valve, Pressure (inc. 28)
12	2603-125	1	Valve, 1.250 x 0.010 in.	28	2604-162	1	● O-Ring
13	2603-040	1	Valve, 0.700 x 0.004 in.	29	0624-546	1	Screw, Valve
14	2603-094	1	Valve, 1.100 x 0.008 in.	30	1604-262	2	Bushing, Shock
15	2603-135	1	Valve, 1.300 x 0.010 in.	31	2639-151	AR	Oil, Gas Shock - 6 qt Case
16	2603-126	2	Valve, 1.250 x 0.012 in.				

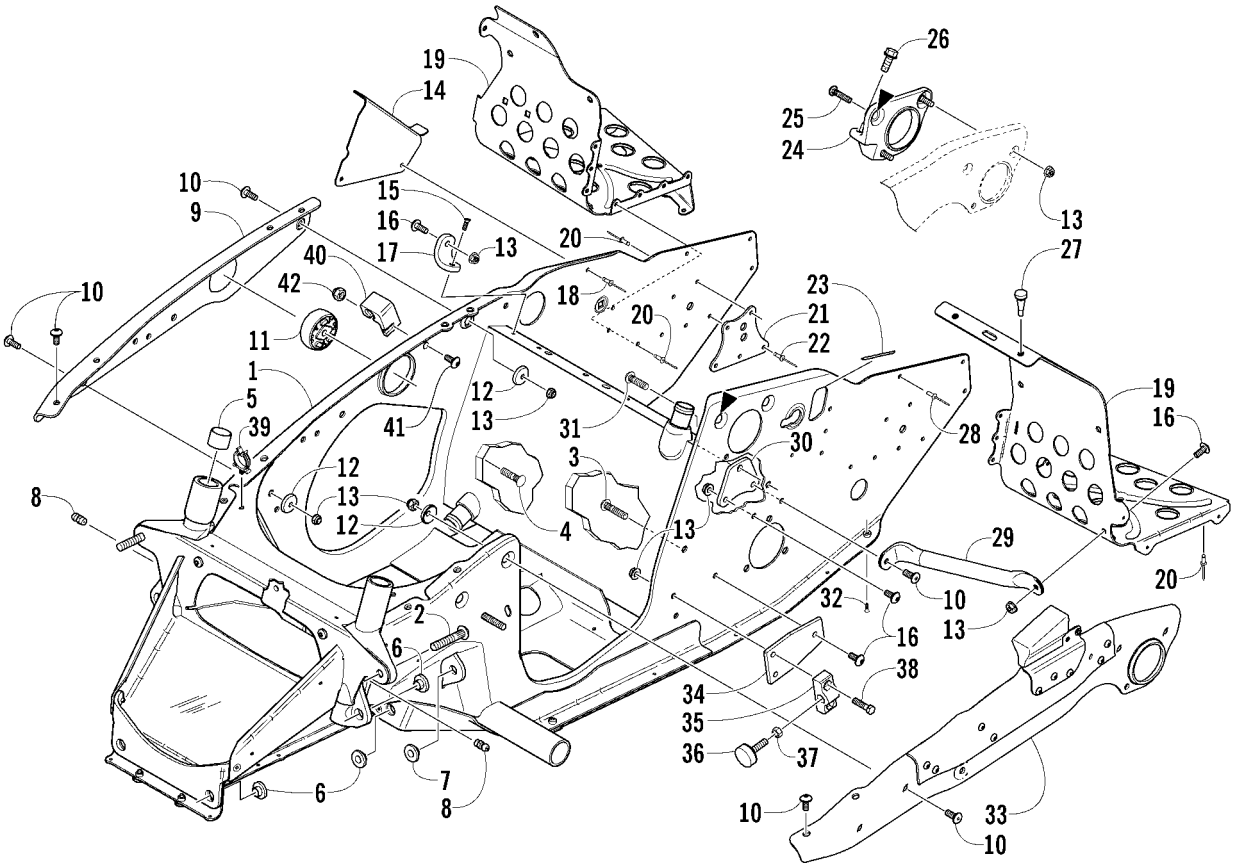

FRONT FRAME AND FOOTREST ASSEMBLY

0739-703

Ref.	Part No.	Qty.	Description	Ref.	Part No.	Qty.	Description
1	0707-819	1	Chassis - Assembly (inc. 2-8)	22	0623-341	6	Rivet
2	1623-019	2	● Bolt, Carriage - Ribbed	23	0706-371	AR	Trim
3	1623-020	2	● Bolt, Carriage - Ribbed	24	0708-433	1	Bracket, Bearing Support (inc. 25)
4	1623-212	1	● Bolt, Carriage - Ribbed	25	0623-117	3	● Bolt, Stud - Ribbed
5	0675-161	4	● Bearing	26	0623-190	1	Screw, Self-Tapping
6	0607-657	6	● Bushing, Lower A-Arm Mount	27	3606-178	2	Bumper
7	0607-656	2	● Bushing, Upper A-Arm Mount	28	1623-130	6	Rivet
8	1623-010	2	● Fitting, Grease	29	2706-517	1	Tube, Belt Guard
9	2706-806	1	Brace, Side Plate	30	0607-725	1	Plate, Backing
10	8017-580	9	Screw, Machine	31	1623-167	1	Bolt, Carriage - Ribbed
11	0608-364	1	Mount, Engine	32	1623-018	2	Screw, Self-Tapping
12	0623-943	4	Washer, Cup	33	2706-843	1	Brace, Side Plate
13	8048-366	14	Nut, Lock	34	2606-939	1	Plate, Mounting - Torque Bumper - Engine
14	2706-552	1	Guard, Hose	35	0704-352	1	Mount, Torque Bumper - Engine
15	1623-115	1	Screw	36	0608-396	1	Bumper, Torque - Engine
16	8017-579	4	Screw, Machine	37	8042-486	1	Nut
17	2706-153	1	Support, Side Plate	38	8002-042	2	Screw, Cap
18	8060-706	2	Rivet	39	1623-171	1	Clip
19	2706-550	1	Footrest - Right	40	0608-432	1	Guide, Rope
	2706-551	1	Footrest - Left	41	8017-400	1	Screw, Machine
20	0623-282	AR	Rivet	42	8041-246	1	Nut, Lock
21	2706-151	2	Plate, Backing				

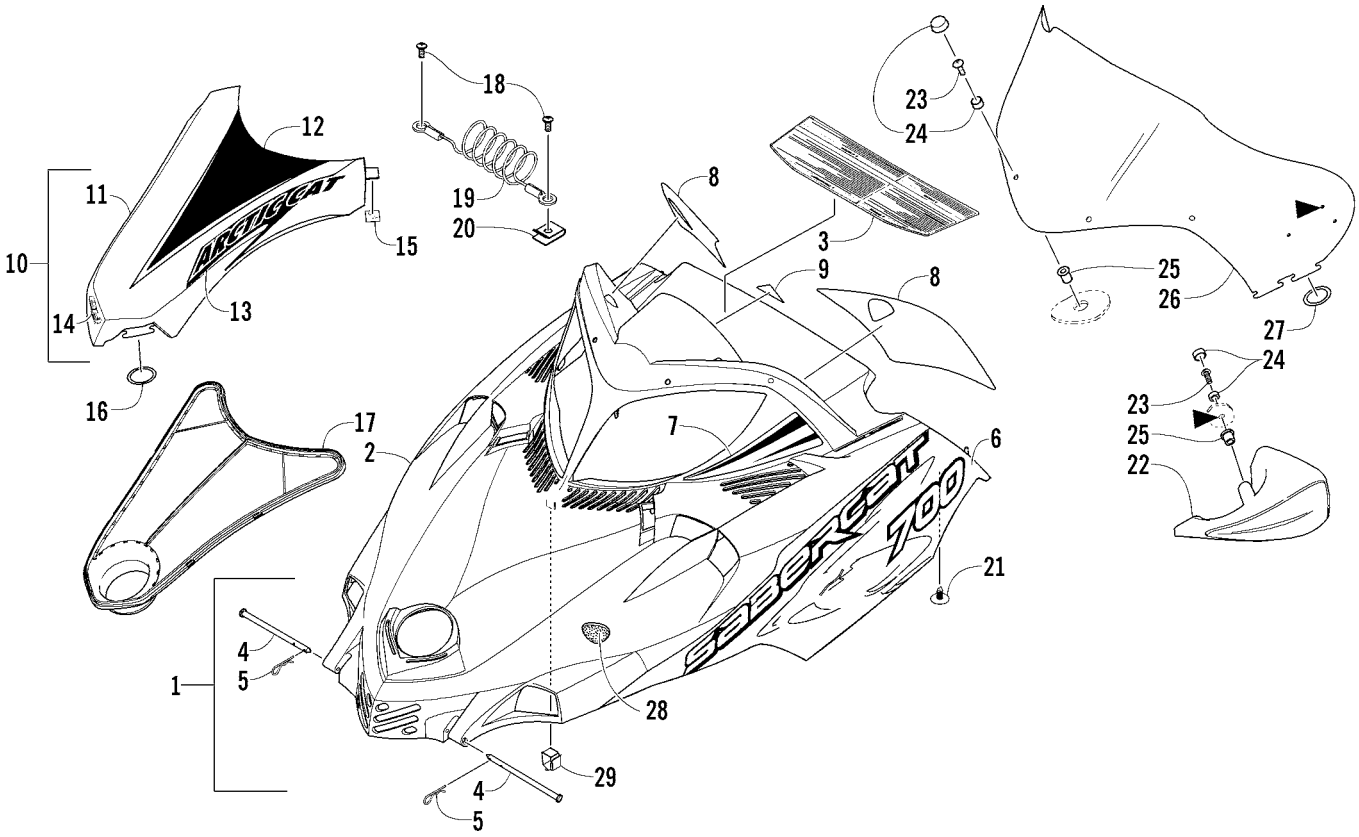

HOOD AND WINDSHIELD ASSEMBLY

0739-704

Ref.	Part No.	Qty.	Description
1	1718-723	1	Hood w/Decals - Red (inc. 2-9)
2	1718-663	1	● Hood w/o Decals - Red (inc. 3-5)
3	5611-483	1	● ● Decal, Warning - General and Brake
4	1623-026	2	● ● Pin, Clevis
5	0623-847	2	● ● Clip, Hairpin
6	6611-236	1	● Decal, Hood - Lower Right
	6611-237	1	● Decal, Hood - Lower Left
7	6611-238	1	● Decal, Hood - Upper Right
	6611-239	1	● Decal, Hood - Upper Left
8	6611-240	1	● Decal, Console - Right
	6611-241	1	● Decal, Console - Left
9	3611-611	1	● Decal, “Made In U.S.A.” - Domed
10	1718-665	1	Cover, Hood - Black (inc. 11-15)
11	2706-031	1	● Cover, Hood w/o Decals - Black
12	6611-242	1	● Decal, Cover - Center
13	6611-244	1	● Decal, Cover - Right
	6611-245	1	● Decal, Cover - Left
14	6611-243	1	● Decal, Cover - Front
15	2606-007	1	● Foil, Protective
16	2606-801	2	O-Ring
17	3606-150	1	Screen, Hood
18	0623-302	4	Screw, Self-Tapping
19	2606-726	2	Cable, Hood
20	1623-052	2	U-Nut
21	0623-544	2	Plug
22	2639-477	2	Kit, Mirror (inc. six No. 23-25)
23	0623-902	10	● Screw, Machine
24	0124-054	10	● Snap Cap w/Washer
25	0623-845	10	● Nut, Expansion
26	3606-562	1	Windshield
27	0616-032	4	O-Ring
28	0617-466	1	Foam, Hood
29	0123-394	14	Clip, Retaining - Foam

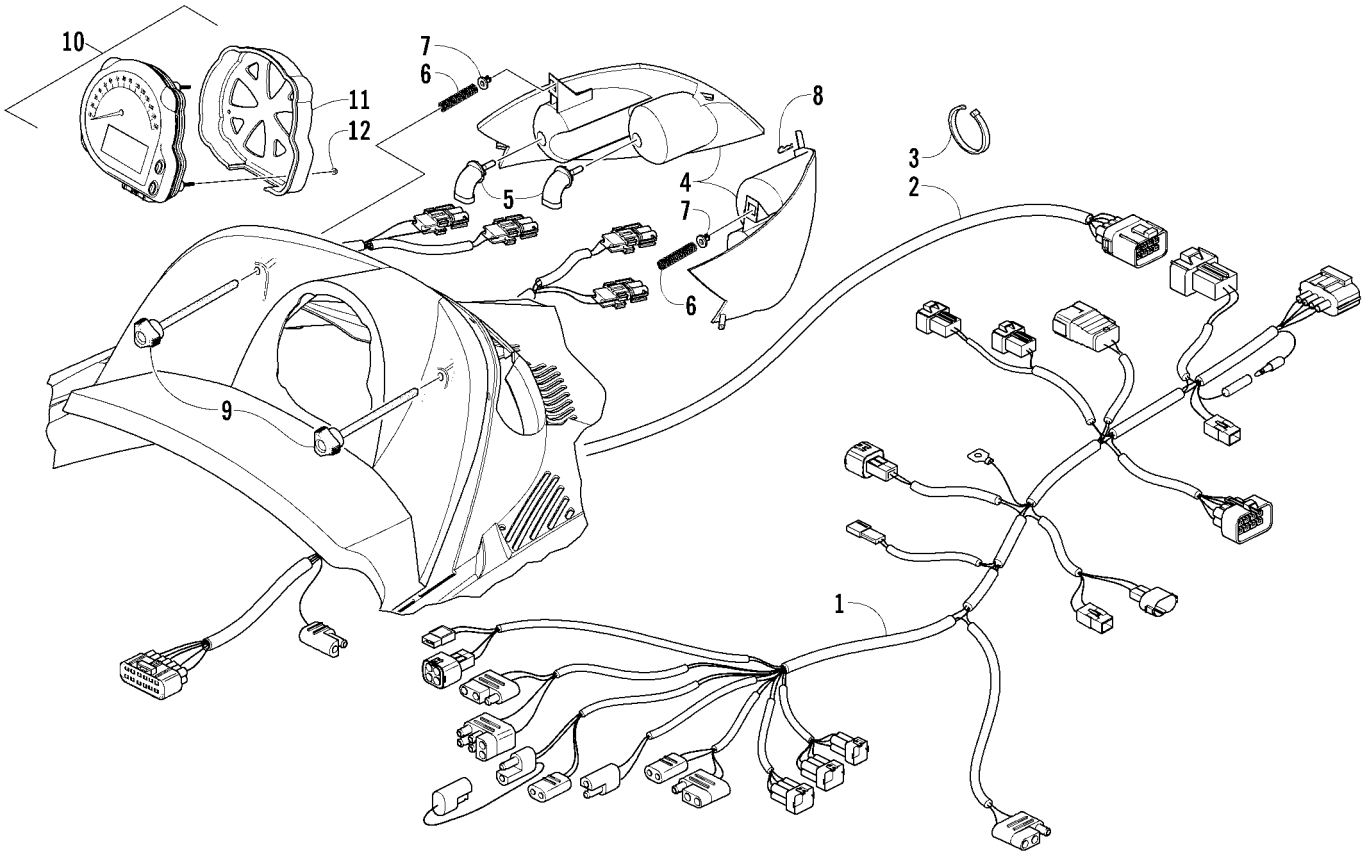

HEADLIGHT, INSTRUMENTS, AND WIRING ASSEMBLIES

0739-705

Ref.	Part No.	Qty.	Description	Ref.	Part No.	Qty.	Description
1	1686-053	1	Harness, Main	7	1623-025	2	Insert
2	1686-065	1	Harness, Hood	8	1623-137	2	Clip, Hairpin
3	0123-788	AR	Cable Tie - 8 in.	9	1623-024	2	Screw, Adjuster
4	0609-530	1	Lens/Reflector - Headlight - Right (inc. 5)	10	0620-292	1	Tachometer/Speedometer (inc. 11-12)
	0609-531	1	Lens/Reflector - Headlight - Left (inc. 5)	11	0620-281	1	● Bracket, Retaining
5	0609-251	4	● Bulb, Headlight	12	0620-280	4	● Nut w/Washer
6	0623-360	2	Spring, Adjuster				

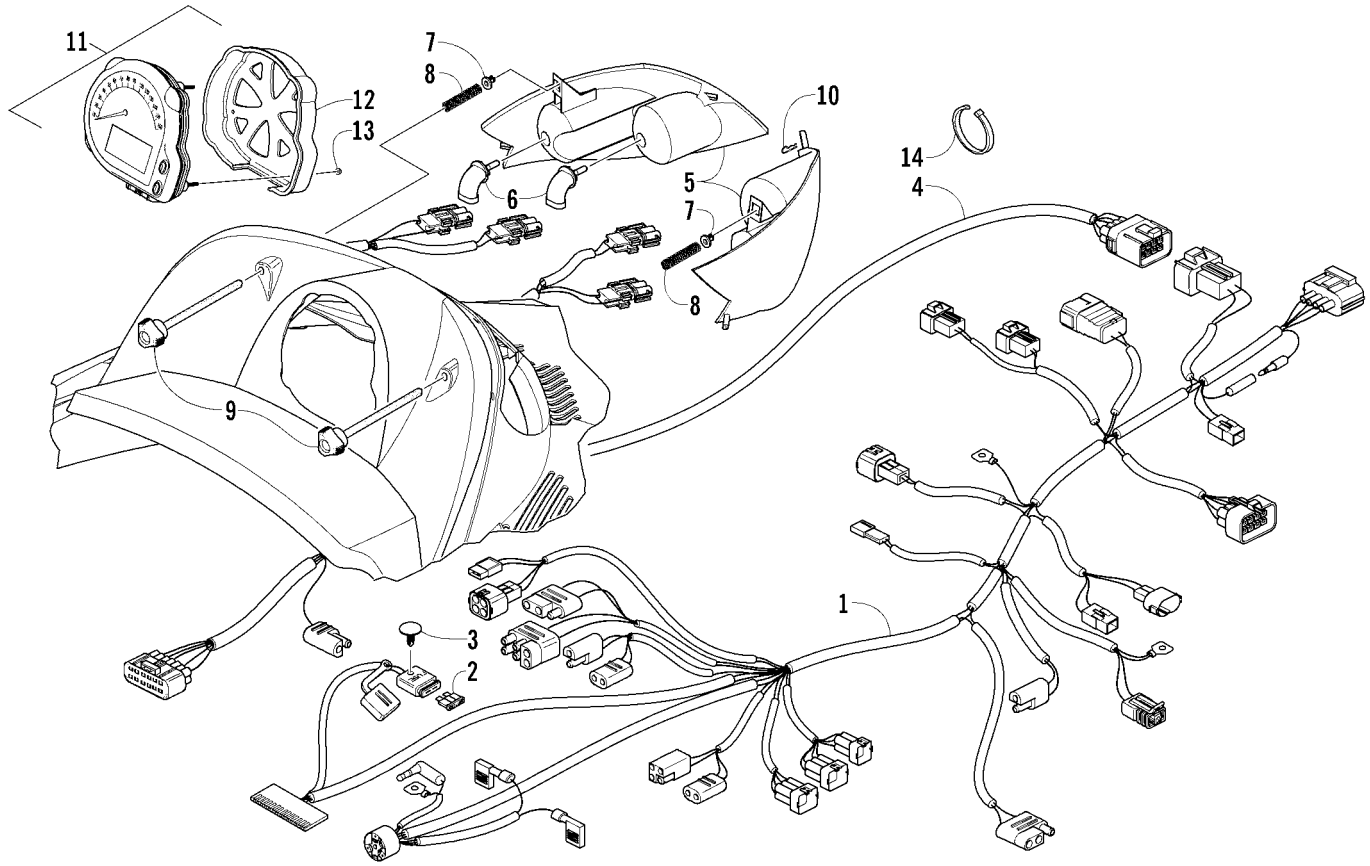

HEADLIGHT, INSTRUMENTS, AND WIRING ASSEMBLIES (LX/EXT)

0739-707

Ref.	Part No.	Qty.	Description	Ref.	Part No.	Qty.	Description
1	1686-018	1	Harness, Main (inc. 2)	7	1623-025	2	Insert
	1686-051	1	Harness, Main (inc. 2) (EXT)	8	0623-360	2	Spring, Adjuster
2	0630-100	1	● Fuse, 7.5 Amp	9	1623-024	2	Screw, Adjuster
3	0623-589	1	Clip, Retaining	10	1623-137	2	Clip, Hairpin
4	1686-065	1	Harness, Hood	11	0620-292	1	Tachometer/Speedometer (inc. 12-13)
5	0609-530	1	Lens/Reflector - Headlight - Right (inc. 6)	12	0620-281	1	● Bracket, Retaining
	0609-531	1	Lens/Reflector - Headlight - Left (inc. 6)	13	0620-280	4	● Nut w/Washer
6	0609-251	4	● Bulb, Headlight	14	0123-788	AR	Cable Tie - 8 in.

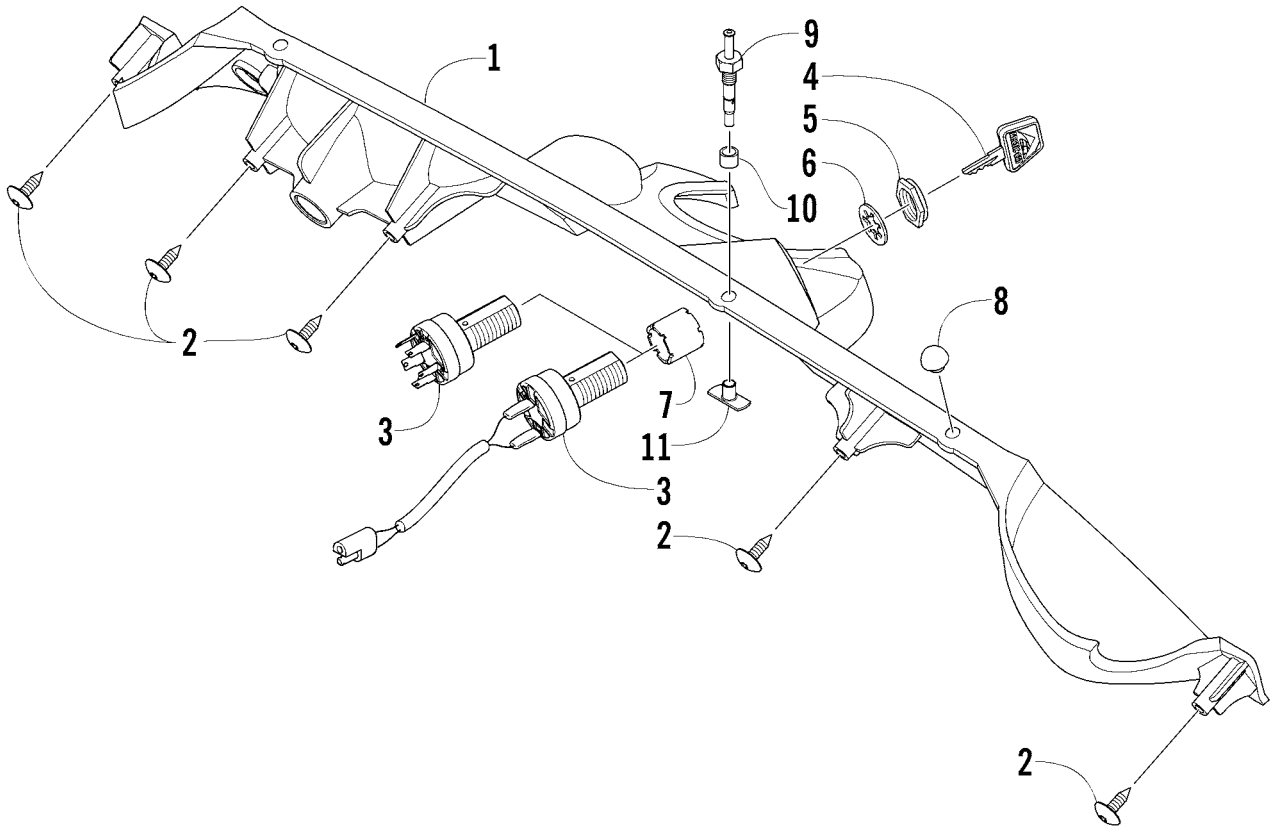

CONSOLE AND SWITCH ASSEMBLY

0739-708

Ref.	Part No.	Qty.	Description	Ref.	Part No.	Qty.	Description
1				6	0123-899	1	Washer, Ignition Switch
	2706-252	1	Console	7	0609-450	1	Spacer, Ignition Switch
2	1623-129	5	Screw, Self-Tapping	8	1612-287	2	Bumper, Molded
3				9	0630-148	1	Switch, Hood
	0609-449	1	Switch, Ignition (inc. 4)	10	3606-355	1	Spacer
4	*	1	● Key	11	1623-184	1	T-Nut
5	0609-113	1	Nut, Retaining				

*Key is coded to switch; see dealer to determine part number.

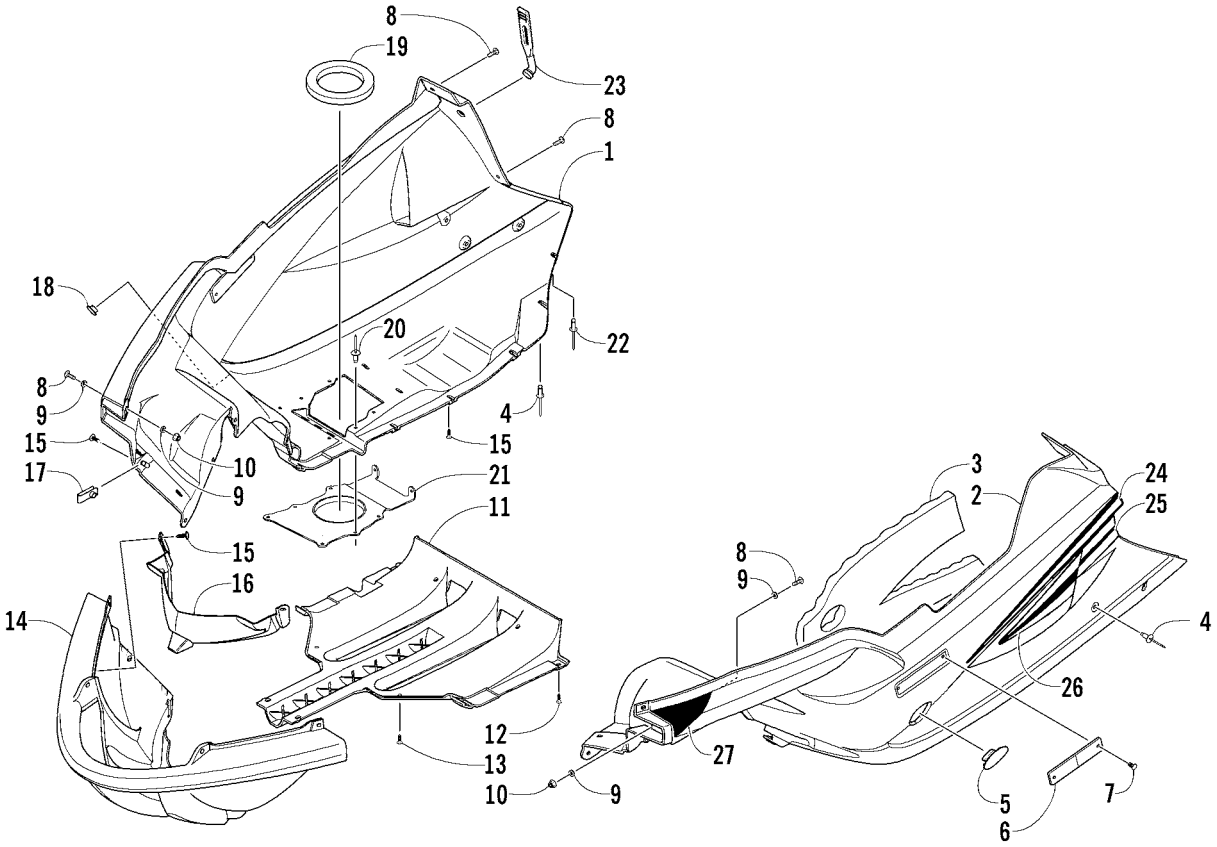

BELLY PAN ASSEMBLY

0739-709

Ref.	Part No.	Qty.	Description	Ref.	Part No.	Qty.	Description
1	2606-646	1	Belly Pan - Right - Black	23	2606-624	2	Strap, Hold-Down
2	2606-647	1	Belly Pan - Left - Black	24	6611-246	1	Decal, Belly Pan - Upper Right
3	0617-443	1	Foam, Belly Pan		6611-247	1	Decal, Belly Pan - Upper Left
4	8061-708	12	Rivet				
5	2606-650	1	Panel, Access - Drive Clutch - Black				
6	0606-526	2	Reflector, Front - Amber				
7	0623-269	4	Clip, Retaining				
8	8017-581	8	Screw, Machine	25	6611-252	1	Decal, Belly Pan - Vent - Rear - Right
9	8050-217	8	Washer		6611-253	1	Decal, Belly Pan - Vent - Rear - Left
10	8040-366	4	Nut, Lock				
11							
	3606-578	1	Belly Pan, Center - Red				
12	1623-031	6	Screw, Self-Tapping				
13	0623-797	8	Screw, Self-Tapping	26	6611-250	1	Decal, Belly Pan - Vent - Front - Right
14					6611-251	1	Decal, Belly Pan - Vent - Front - Left
	3606-579	1	Bumper, Front - Red				
15	0623-784	18	Screw, Self-Tapping				
16	2606-911	1	Screen, Center Belly Pan				
17	1623-030	2	Nut, Speed				
18	3606-050	1	Pin, Resonator Mounting	27	6611-248	1	Decal, Belly Pan - Front - Right
19	1612-603	1	Seal, Exhaust		6611-249	1	Decal, Belly Pan - Front - Left
20	8061-508	8	Rivet				
21	1612-686	1	Deflector, Exhaust				
22	8061-710	2	Rivet				

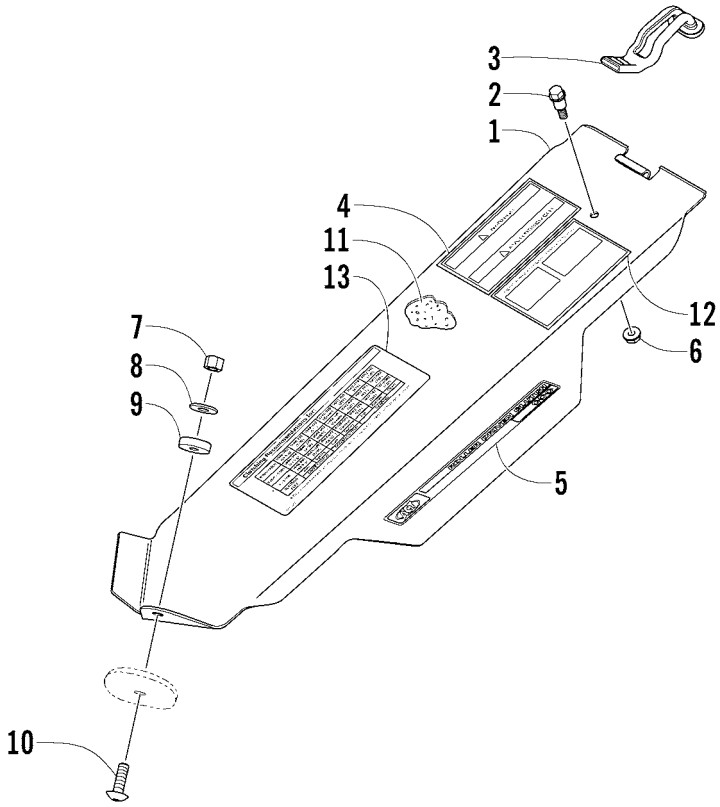

BELT GUARD ASSEMBLY

738-734A

Ref.	Part No.	Qty.	Description	Ref.	Part No.	Qty.	Description
1	0607-822	1	Guard, Belt	8	8050-252	1	Washer
2	0623-855	1	Screw, Shoulder	9	1623-046	1	Washer, Rubber
3	0607-659	1	Strap, Hold-Down	10	8017-672	1	Screw, Machine
4	1611-565	1	Decal, Warning - Belt Guard	11	0617-450	1	Foam, Belt Guard
5	3611-969	1	Decal, “ACT - Roller Driven Clutch”	12	5611-862	1	Decal, Spring Adjustment
6	8048-366	1	Nut, Lock	13	6611-512	1	Decal, Clutching Chart
7	8040-426	1	Nut, Lock				

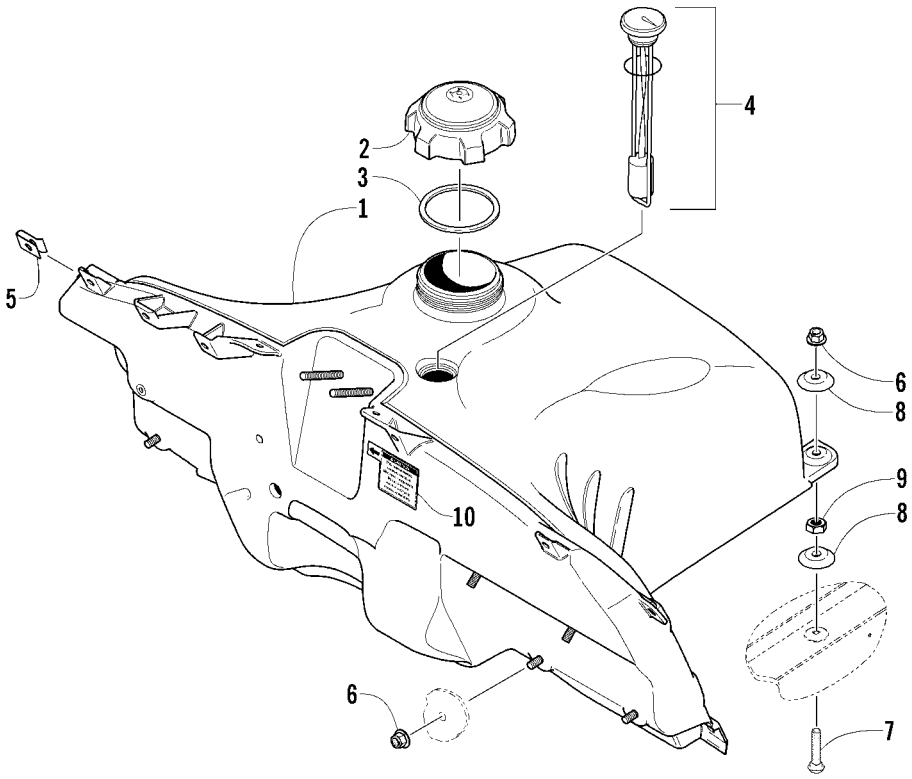

GAS TANK ASSEMBLY

0738-828

Ref.	Part No.	Qty.	Description	Ref.	Part No.	Qty.	Description
1	0770-628	1	Tank, Gas (inc. 2-4)	6	8048-366	9	Nut, Flange
2	1670-447	1	● Cap, Gas Tank (inc. 3)	7	8011-041	2	Bolt, Carriage
3	1670-511	1	● ● Seal, Tank Cap	8	0123-765	4	Washer, Cup
4	1670-523	1	● Gauge, Fuel - Assembly w/Gasket (Press-Fit)	9	8041-366	2	Nut, Lock
				10	5611-861	1	Decal, Caution - Remote Start
5	0623-427	4	U-Nut				

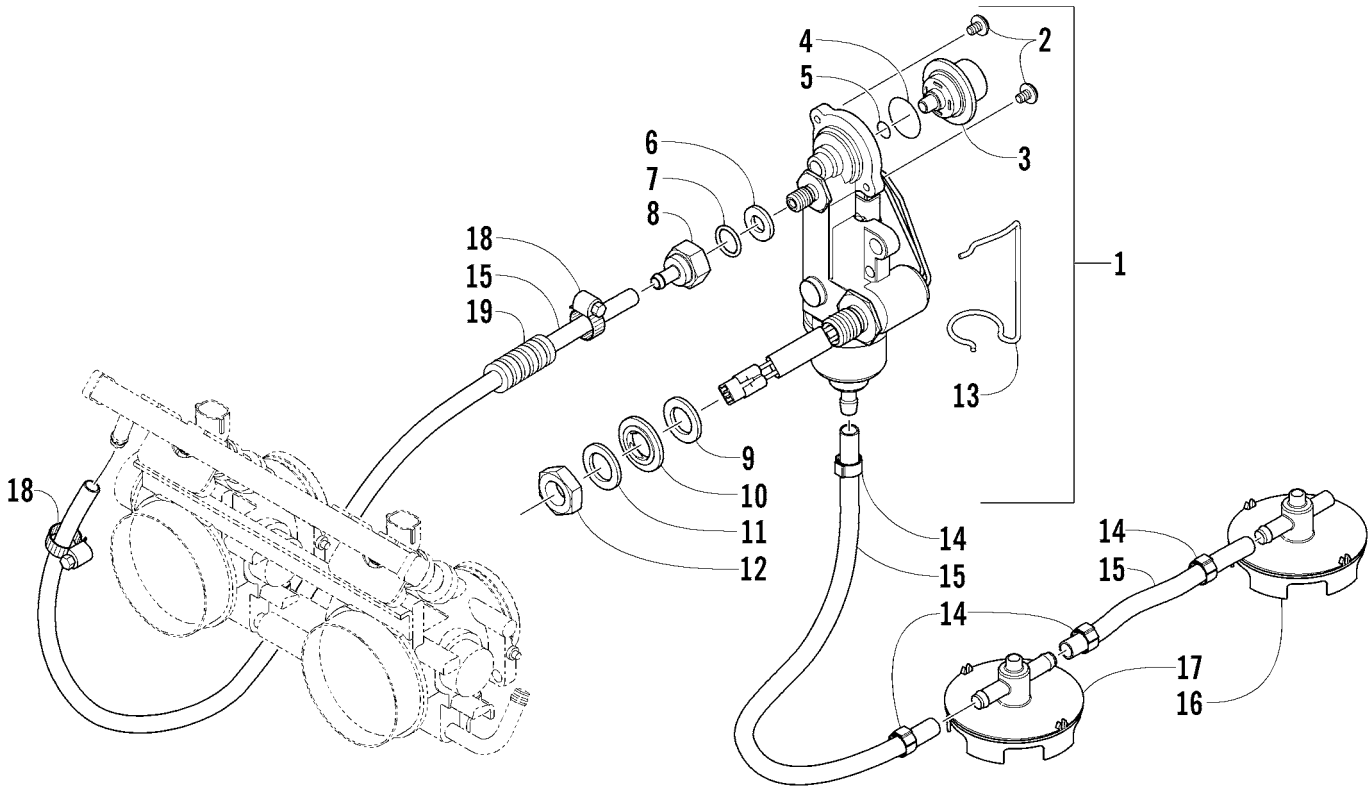

FUEL PUMP ASSEMBLY

0738-987

Ref.	Part No.	Qty.	Description	Ref.	Part No.	Qty.	Description
1	1670-421	1	Pump, Fuel - Assembly (inc. 2-13)	11	1670-478	1	● Washer
2	1670-412	2	● Screw	12	1670-477	1	● Nut, Mounting
3	1670-536	1	● Regulator, Pressure	13	1670-579	1	● Retainer, Wire
4	1670-532	1	● O-Ring, Regulator	14	0610-563	4	Clamp, Hose
5	1670-533	1	● O-Ring, Regulator	15	0610-075	AR	Hose, Gasline - 10 ft
6	1670-535	1	● Grommet	16	1670-618	1	Pickup, Fuel
7	1670-476	1	● O-Ring	17	1670-617	1	Pickup, Fuel
8	1670-475	1	● Nut, Fuel Pump Fitting	18	0623-373	2	Clamp, Hose
9	1670-534	1	● Grommet	19	0716-558	AR	Conduit, Flexible - 10 ft
10	1670-479	1	● Washer, Sealing - Threaded				

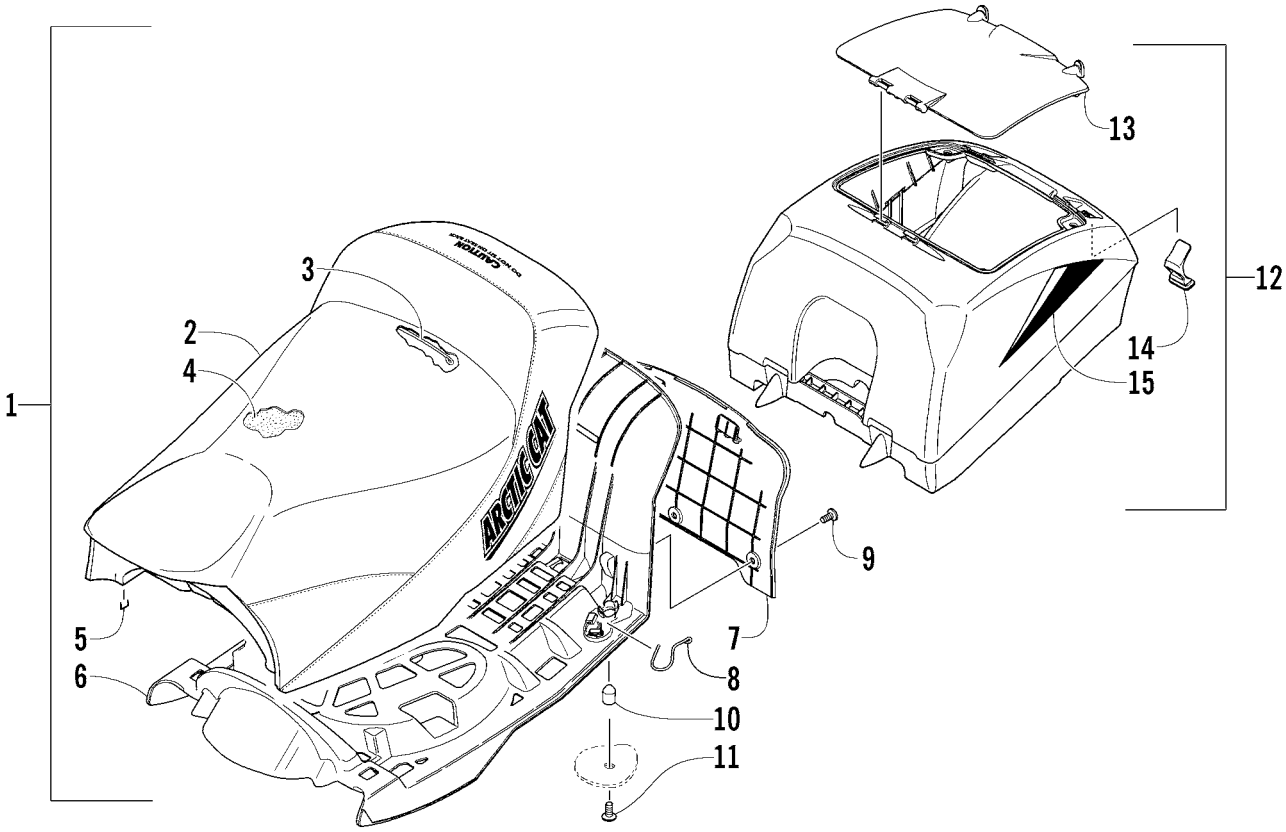

SEAT AND STORAGE BOX ASSEMBLY

0739-721

Ref.	Part No.	Qty.	Description	Ref.	Part No.	Qty.	Description
1	7998-106	1	Complete Seat Assembly (inc. 2-9)	9	1623-158	3	● Screw, Self-Tapping
				10	1623-138	2	Latch, Seat
				11	8017-667	2	Screw, Machine
2	2706-721	1	● Cover, Seat (inc. 3)	12	3606-074	1	Box, Storage (inc. 13-14)
				13	3606-072	1	● Cover, Storage Box
				14	3606-357	2	● Strap, Hold-Down
3	3606-369	1	● ● Wire, Seat	15	6611-256	1	Decal, Storage Box - Right
4	0717-176	1	● Foam, Seat		6611-257	1	Decal, Storage Box - Left
5	0624-528	AR	● Staple				
6	3606-056	1	● Base, Seat				
7	3606-248	1	● Panel, Seat				
8	1623-177	2	● Clip, Retaining				

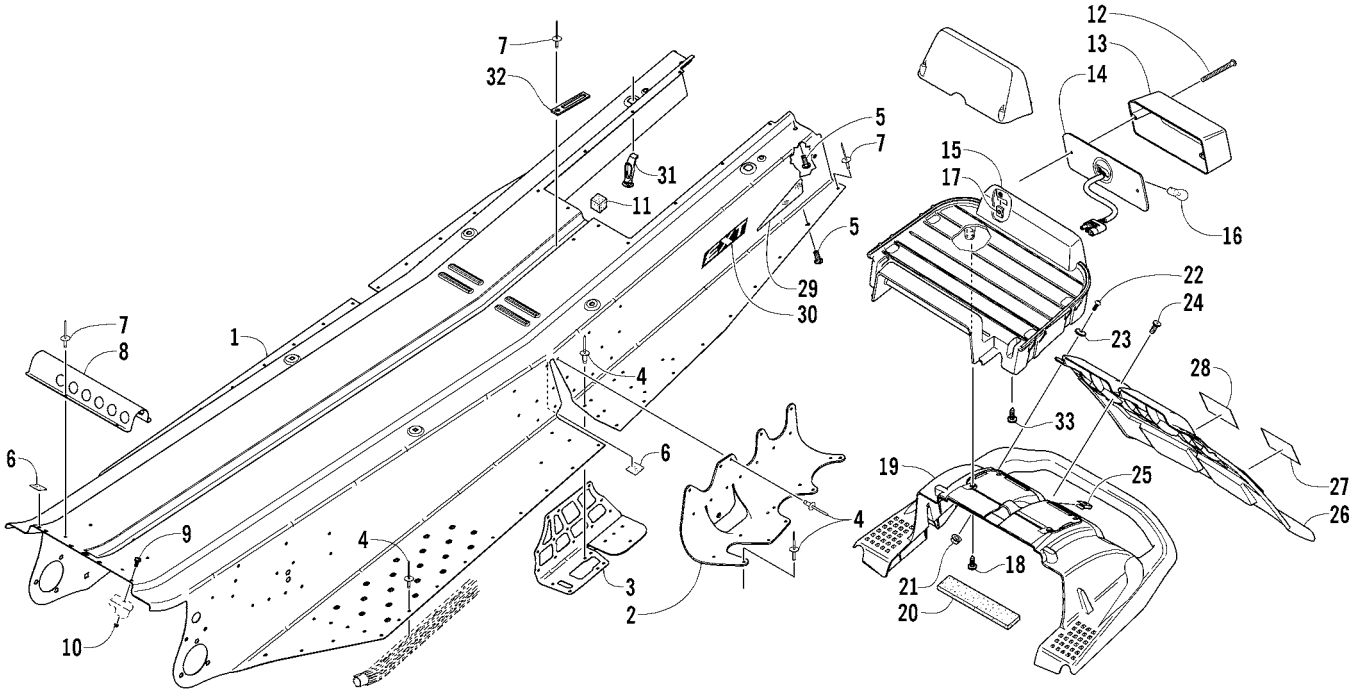

TUNNEL, REAR BUMPER, AND TAILLIGHT ASSEMBLY

0739-730 *Optional

Ref.	Part No.	Qty.	Description	Ref.	Part No.	Qty.	Description
1	1718-569	1	Tunnel Assembly (inc. 2-4)	16	0109-460	1	Bulb, Taillight
2	2706-556	1	● Bracket, Suspension Mounting - Right - Rear	17	1623-023	2	Nut, Speed
				18	1623-109	4	Screw, Self-Tapping
	2706-557	1	● Bracket, Suspension Mounting - Left - Rear	19	3606-453	1	Bumper, Rear (inc. 20)
				20	0617-496	1	● Foam, Rear Heat Exchanger
3	2706-264	1	● Plate, Backing - Right	21	8048-366	2	Nut, Lock
	2706-263	1	● Plate, Backing - Left	22	8017-581	2	Screw, Machine
4	0123-418	AR	● Rivet	23	1623-242	2	Washer
	0623-806	AR	● Rivet	24	8017-577	1	Screw, Machine
	8060-506	AR	● Rivet*	25	0623-363	1	Nut, Speed
5	1623-022	6	Screw, Self-Tapping	26	3606-333	1	Snowflap w/Decals (inc. 27-28)
6	2606-007	3	Foil, Protective	27	5611-852	1	● Decal, Warning - Towing (French)
7	8060-504	9	Rivet	28	5611-853	1	● Decal, Warning - Towing (English)
8	2606-938	1	Protector, Wiring Harness	29	6611-012	1	Decal, Reflector - Red - Right
9	8017-399	2	Screw, Machine		6611-013	1	Decal, Reflector - Red - Left
10	8040-246	2	Nut, Lock	30	6611-260	2	Decal, “EXT” - Tunnel
11	0617-455	1	Foam, Rear Heat Exchanger				
12	0623-204	2	Screw, Machine				
13	0609-229	1	Lens, Taillight	31	3606-223	2	Strap, Hold-Down - Storage Box
14	0609-230	1	Taillight w/Socket Assembly	32	3002-964	1	Clamp, Wire
15	0609-638	1	Housing, Taillight	33	1623-061	2	Screw, Self-Tapping

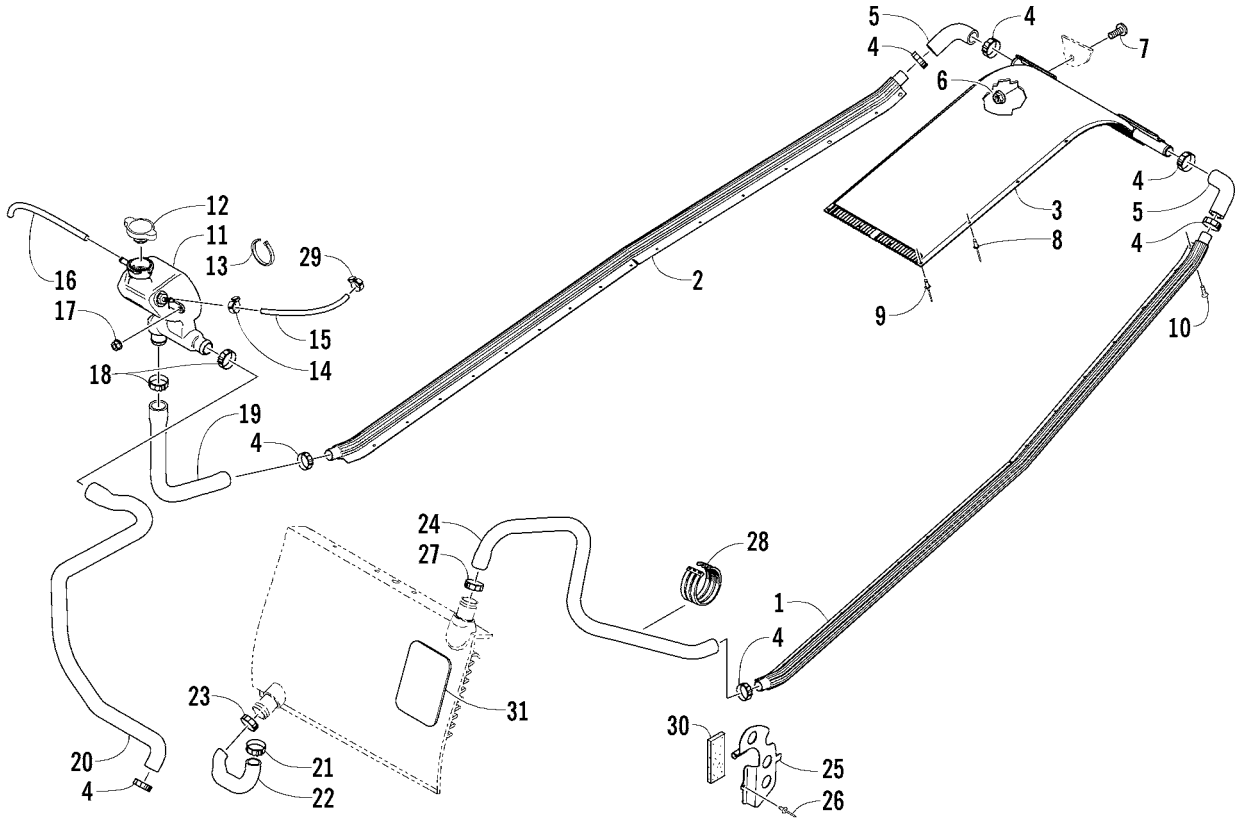

COOLING ASSEMBLY

0739-731

Ref.	Part No.	Qty.	Description	Ref.	Part No.	Qty.	Description
1	2706-565	1	Heat Exchanger - Left Tube	17	8048-366	1	Nut, Lock
				18	1623-092	2	Clamp, Hose
2	2706-564	1	Heat Exchanger - Right Tube	19	0610-571	1	Hose, Coolant - Right Tube/Coolant Tank
				20	0610-573	1	Hose, Coolant - Coolant Tank/Engine
3	2706-522	1	Heat Exchanger, Rear	21	1623-048	1	Clamp, Hose
4	1623-229	7	Clamp, Hose	22	0610-648	1	Hose, Coolant - Engine/Front Heat Exchanger
5	0610-567	2	Hose, Coolant - Rear Heat Exchanger				
6	8041-246	2	Nut, Lock	23	1623-186	1	Clamp, Hose
7	8017-397	2	Screw, Machine	24	0610-570	1	Hose, Coolant - Front Heat Exchanger/ Left Tube
8	8060-504	6	Rivet				
9	1623-405	4	Rivet	25	3606-354	1	Protector, Hose
10	1623-061	2	Screw, Self-Tapping	26	0623-166	1	Rivet
11	3606-349	1	Tank, Coolant	27	1623-187	1	Clamp, Hose
12	0606-268	1	Cap, Filler Neck	28	0623-540	3	Cable Tie - Triple
13	0123-788	AR	Cable Tie - 8 in.	29	0124-045	1	Clamp, Hose
14	0623-063	1	Clamp, Hose	30	0406-288	1	Pad
15	0610-538	AR	Hose, Vent - 25 ft				
16	0610-015	AR	Hose, Vent - 100 ft				
	0610-016	AR	Hose, Vent - 25 ft				

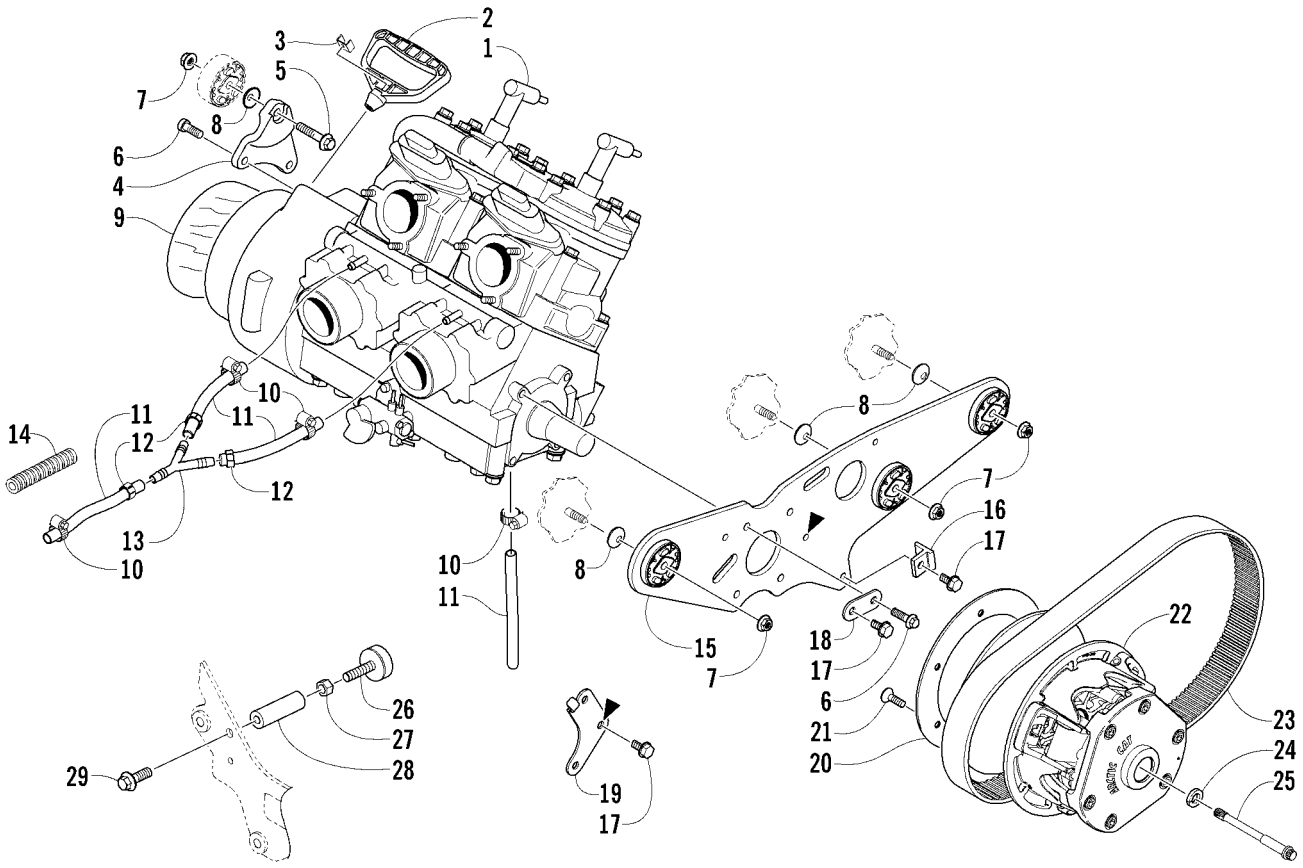

ENGINE AND RELATED PARTS

0739-725

Ref.	Part No.	Qty.	Description	Ref.	Part No.	Qty.	Description
1	0662-407	1	Engine, AD70L3 w/o EFI Components	16	0608-400	1	● Bumper, Torque
2	0636-363	1	Handle, Recoil	17	0623-765	3	● Screw, Self-Tapping
3	0606-885	1	Cap, Recoil Handle	18	0608-407	1	Plate, Reinforcement
4	0608-388	1	Bracket, Engine Mounting - Right	19	0608-397	1	Plate, Reinforcement
5	8020-136	1	Screw, Cap				
6	8408-820	6	Screw, Cap				
7	8048-426	4	Nut, Lock	22	0725-396	1	Clutch, Drive
8	0623-987	3	Washer	23	0627-035	1	Belt, Drive
9	1670-328	1	Foil, Protective	24	0623-210	1	Washer, High Collar
10	0623-373	5	Clamp, Hose	25	0623-804	1	Bolt, Clutch
11	0610-076	AR	Hose, Coolant - 10 ft	26	0608-396	1	Bumper, Torque - Engine
12	0610-581	3	Clamp, Hose	27	8042-486	1	Nut
13	1670-596	1	Y-Fitting	28	0608-394	1	Tube, Torque Bumper
14	0619-776	AR	Conduit, Flexible - 5 ft	29	8020-220	1	Screw, Cap
15	0708-431	1	Bracket, Engine Mounting - Left (inc. 16 and one No. 17)				

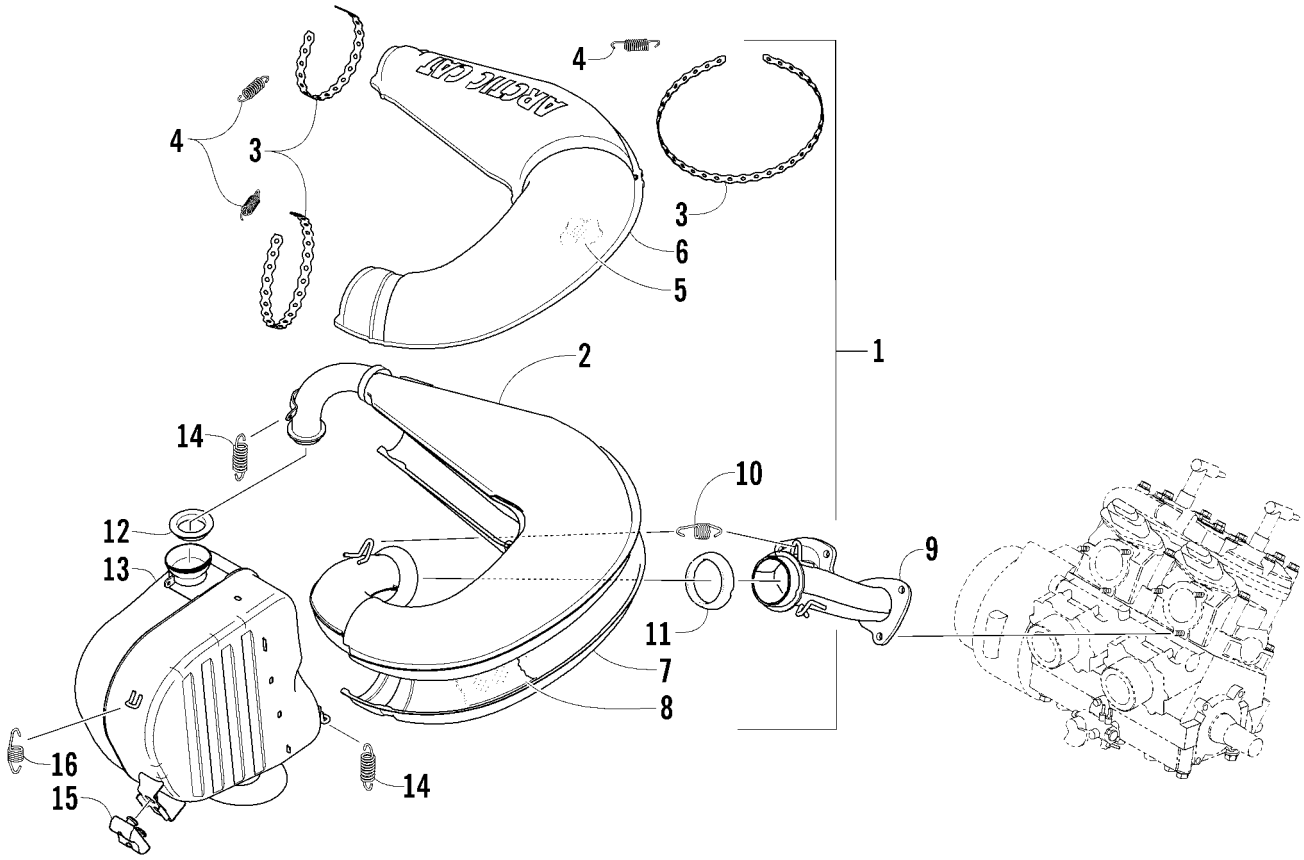

EXHAUST ASSEMBLY

0739-723

Ref.	Part No.	Qty.	Description	Ref.	Part No.	Qty.	Description
1	1712-114	1	Chamber, Expansion - Assembly (inc. 2-8)	9	1712-104	1	Manifold, Exhaust
2	1712-115	1	● Chamber, Expansion	10	0612-820	3	Spring, Exhaust
3	0624-526	AR	● Tie, Perforated Band - 5 ft	11	1612-014	1	Gasket, Exhaust
	0624-541	AR	● Tie, Perforated Band - 25 ft	12	1612-323	1	Gasket, Exhaust - Tailpipe
4	1612-178	3	● Spring, Exhaust	13	1712-022	1	Resonator
5	1612-590	1	● Packing, Expansion Chamber - Upper	14	0612-471	5	Spring, Extension
6	1612-574	1	● Cover, Expansion Chamber - Upper	15	1612-685	1	Brace, Resonator
7	1612-804	1	● Cover, Expansion Chamber - Lower	16	0612-668	1	Spring, Extension
8	1612-805	1	● Packing, Expansion Chamber - Lower				

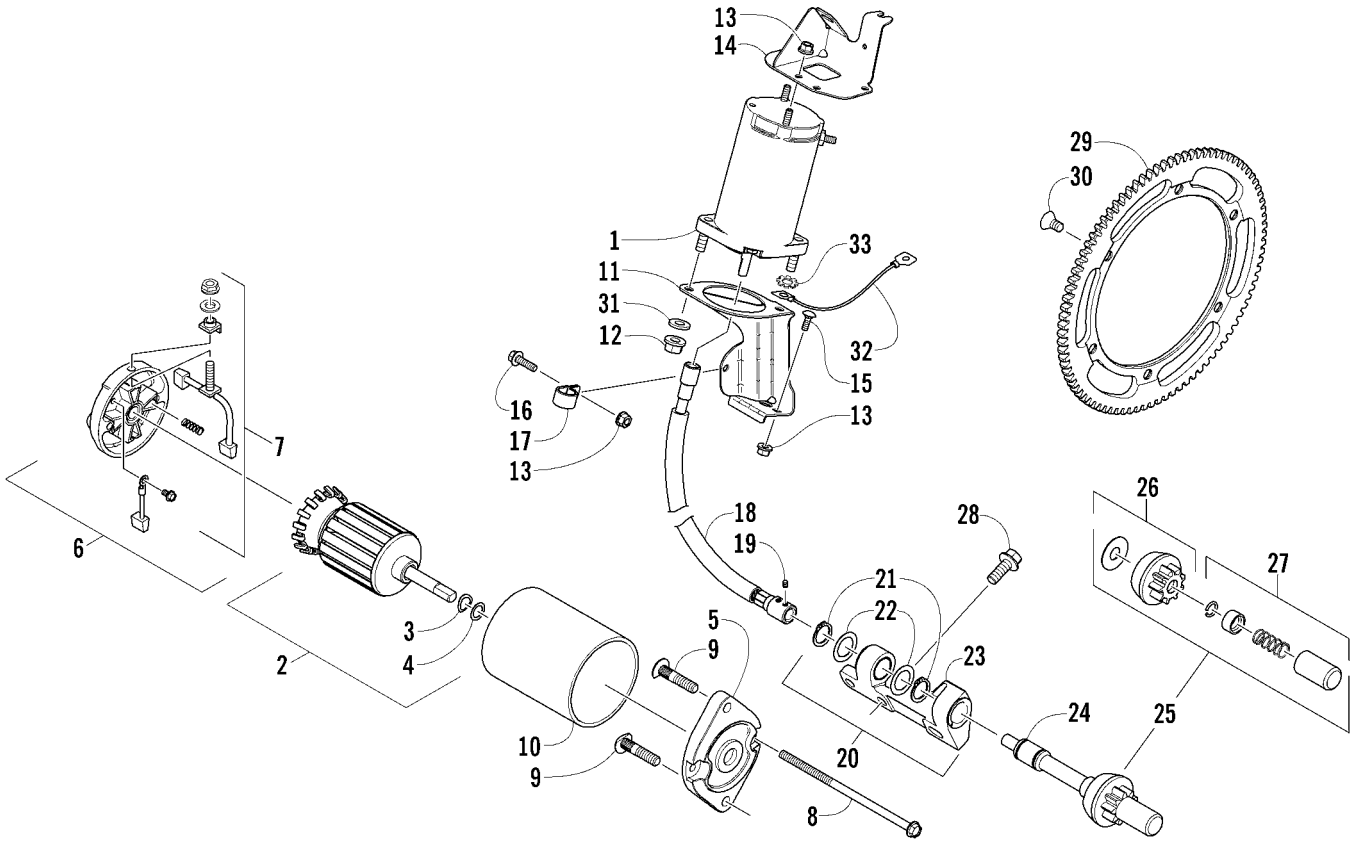

FLEX-DRIVE STARTER MOTOR ASSEMBLY

(Optional Kit p/n 3639-966)

0739-718 *Not a Service Part

Ref.	Part No.	Qty.	Description	Ref.	Part No.	Qty.	Description
1	0745-143	1	Motor, Starter (inc. 2-10)	19	0623-891	4	● Screw, Set - Socket
2	0645-296	1	● Armature Assembly (inc. 3-4)	20	0745-208	1	Bracket, Pinion Drive - Assembly (inc. 21-27)
3	0645-131	1	● ● Washer, Wave				
4	0645-293	1	● ● Washer, Thrust	21	0645-382	2	● Ring, Snap
5	0645-297	1	● Cap, Drive	22	0645-429	2	● Washer, Thrust
6	0645-313	1	● Cap, Commutator (inc. 7)	23	0745-165	1	● Bracket, Pinion Drive
7	0645-275	1	● ● Kit, Brush and Spring	24	0745-170	1	● Drive, Pinion - Flex-Drive Shaft (inc. 25-27)
8	0645-128	2	● Through-Bolt				
9	0623-093	2	● Bolt, Ribbed	25	0745-224	1	● ● Kit, Pinion Drive Assembly (inc. 26-27)
10	*	1	● Case, Starter Motor	26	0645-380	1	● ● ● Pinion Drive Assembly
11	0745-207	1	Bracket, Mounting - Starter Motor	27	0645-186	1	● ● ● Pinion Stopper Assembly
12	8048-426	2	Nut, Lock	28	8026-131	2	Screw, Cap
13	8048-366	4	Nut, Lock	29	0645-367	1	Ring Gear
14	0745-260	1	Bracket, Mounting - Starter Motor	30	1623-128	6	Screw, Machine - Socket Head
15	8011-039	1	Bolt, Carriage	31	0123-053	2	Washer
16	8020-040	1	Screw, Cap	32	1686-124	1	Wire, Ground
17	1623-080	1	Clamp, Flex-Drive Shaft	33	8053-212	1	Washer, Lock - External Tooth
18	0745-221	1	Shaft, Flex-Drive (inc. 19)				

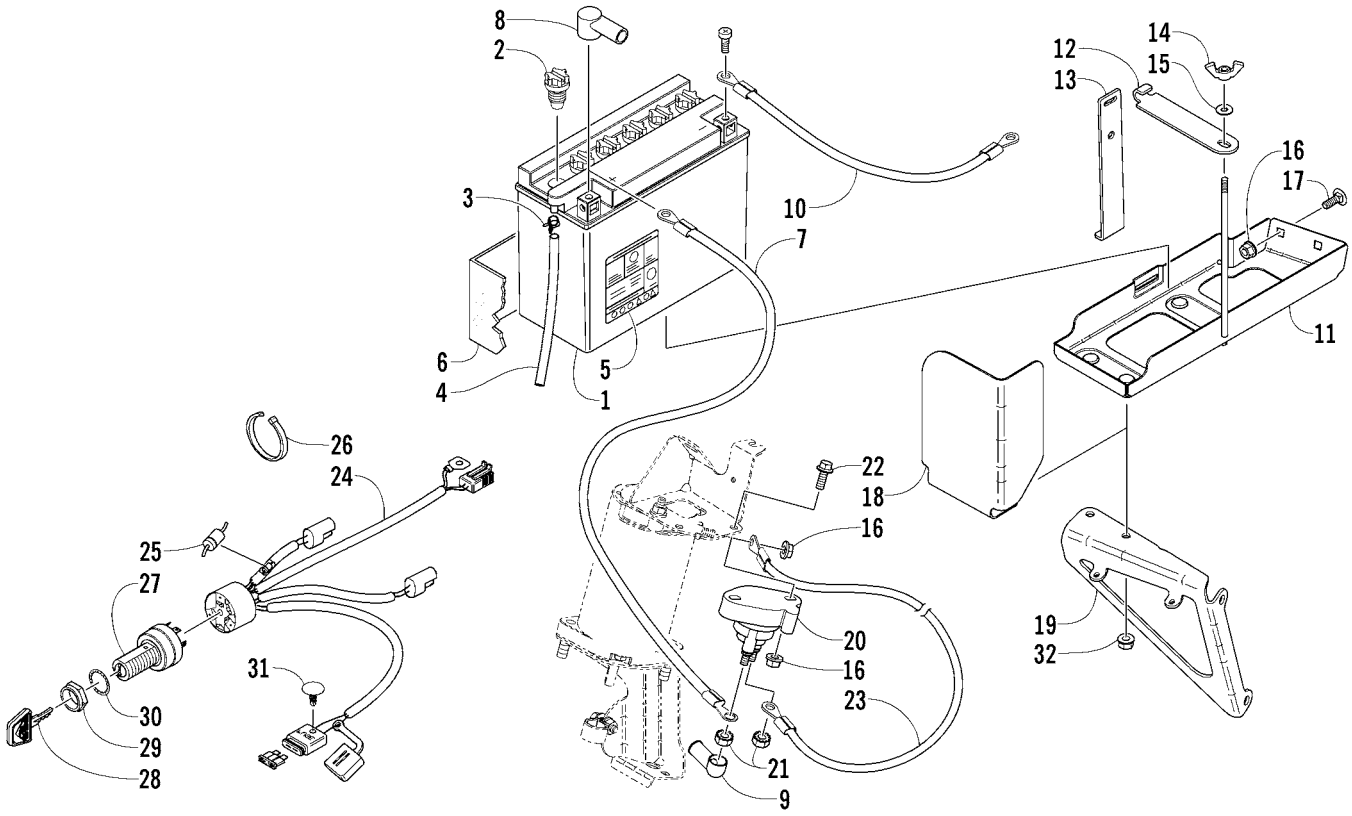

BATTERY, SOLENOID, AND CABLES

0739-694 *Included in Kit

Ref.	Part No.	Qty.	Description	Ref.	Part No.	Qty.	Description
1	0745-059	1	Battery (inc. 2-6)	17	8011-039	2	Bolt, Carriage
2	0645-246	6	● Cap, Battery	18	0745-220	1	Shield, Heat
3	0645-152	1	● Clamp, Hose	19	0745-204	1	Bracket, Mounting - Battery Tray
4	0645-263	1	● Hose, Battery Vent	20	0445-036	1	Solenoid
5	0645-151	1	● Decal, Warning - Battery	21	0623-038	2	Nut w/Washer
6	0645-082	AR	● Wrap, Heat - Battery	22	8020-043	2	Screw, Cap
7	0645-457	1	Cable, Battery/Solenoid (inc. 8-9)	23	0645-467	1	Cable, Solenoid/Starter
8	0645-019	1	● Boot, Terminal - Battery	24	1686-117	1	Harness, Electric Start (inc. 25-26)*
9	0645-327	1	● Boot, Terminal - Solenoid	25	0630-002	1	● Diode, Charging
10	0645-136	1	Cable, Battery/Ground	26	0123-811	2	● Cable Tie - 4 in.
11	0745-250	1	Tray, Battery	27	0609-449	1	Switch, Ignition (inc. 28)*
12	0645-243	1	Strap, Battery - Top	28	**	1	● Key*
13	0645-311	1	Strap, Battery - Side	29	0609-113	1	Nut, Retaining*
14	0623-325	1	Nut, Wing	30	0123-899	1	Washer, Ignition Switch*
15	8050-217	1	Washer	31	0623-589	1	Clip, Retaining*
16	8048-366	5	Nut, Lock	32	8047-366	2	Nut, Lock

**Key is coded to switch; see dealer to determine part number.

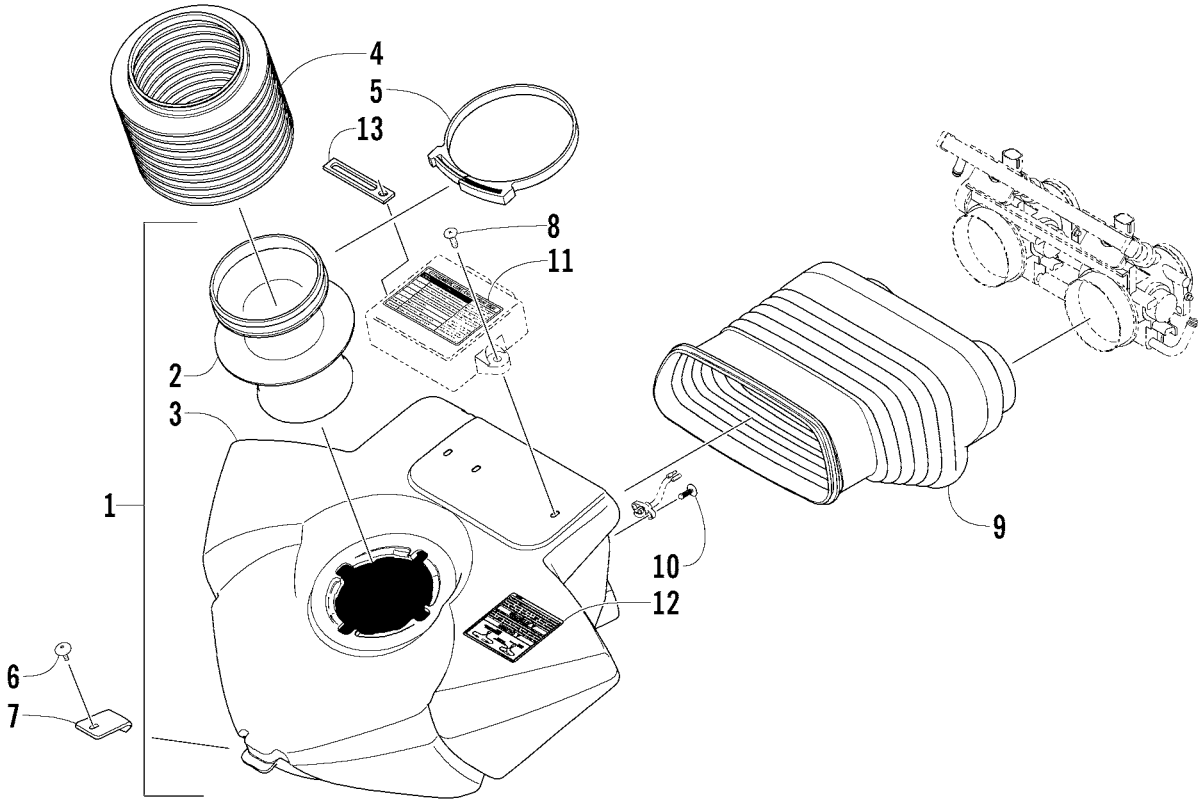

AIR SILENCER ASSEMBLY

0738-749

Ref.	Part No.	Qty.	Description	Ref.	Part No.	Qty.	Description
1	0770-620	1	Silencer, Air - Assembly (inc. 2-3)	8	1623-204	2	Screw, Self-Tapping
2	1670-473	1	● Intake, Air	9	1670-584	1	Boot, Air Silencer
3	1670-621	1	● Silencer, Air	10	0623-165	2	Clip, Retaining
4	1670-514	1	Connector, Air-Intake	11	5611-619	1	Decal, ECU
5	1623-132	2	Clamp, Air-Intake Connector	12	3611-403	1	Decal, Fuel Designation
6	1623-031	1	Screw, Self-Tapping	13	3002-964	1	Clamp, Wire
7	3606-146	1	Hold-Down, Air Silencer				

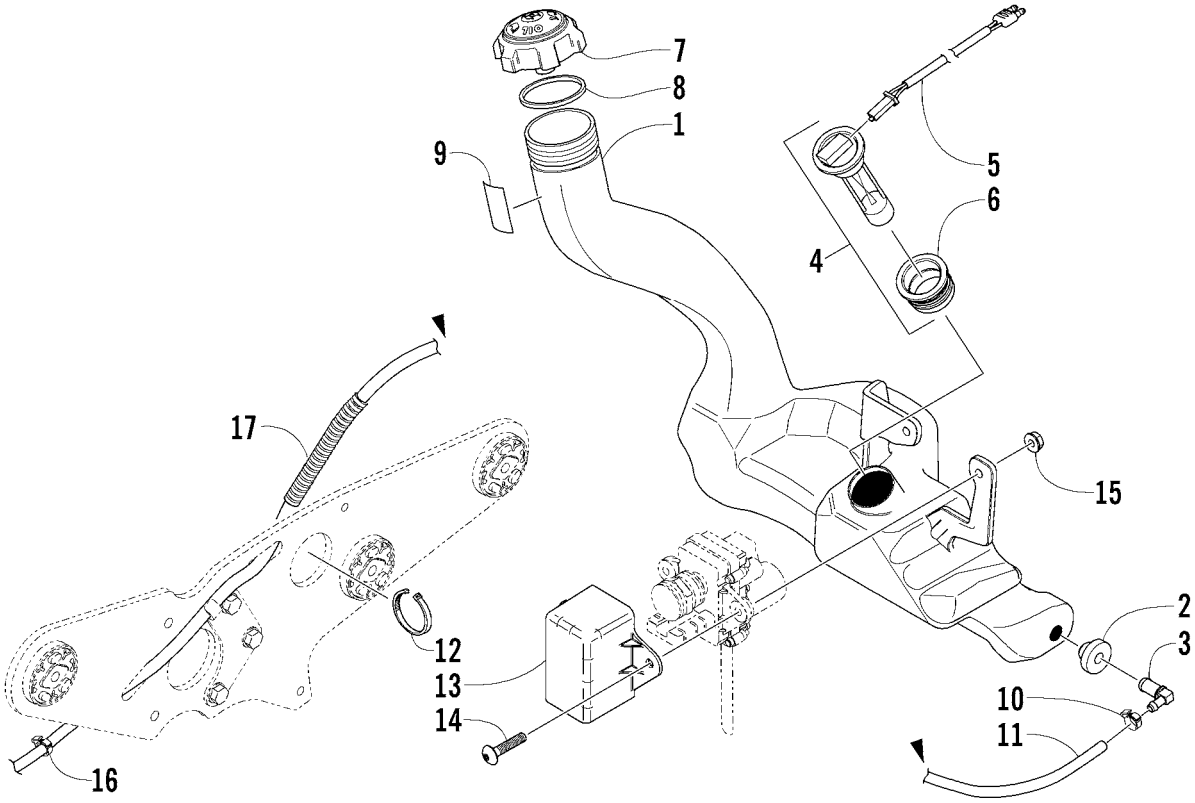

OIL TANK ASSEMBLY

0739-691

Ref.	Part No.	Qty.	Description	Ref.	Part No.	Qty.	Description
1	1670-673	1	Tank, Oil (inc. 2-3)	10	0623-063	1	Clamp, Hose
2	1670-325	1	● Grommet	11	0610-015	AR	Hose, Oil - 100 ft
3	1670-324	1	● Fitting, Elbow		0610-016	AR	Hose, Oil - 25 ft
4	0609-683	1	Sensor, Low Oil - Assembly (inc. 5-6)	12	0123-903	1	Cable Tie - 11.5 in.
5	0609-639	1	● Switch, Oil Sensor w/Harness	13	2606-129	1	Cover, Servomotor
6	0609-237	1	● Seal, Grommet - Oil Sensor	14	8017-584	2	Screw, Cap
7	1670-365	1	Cap, Oil Tank (inc. 8)	15	8048-366	2	Nut, Lock
8	0109-733	1	● Seal, Cap - Oil Tank	16	0124-045	1	Clamp, Hose
9	4611-532	1	Decal, Oil Tank	17	0716-558	AR	Loom, Protective - 10 ft

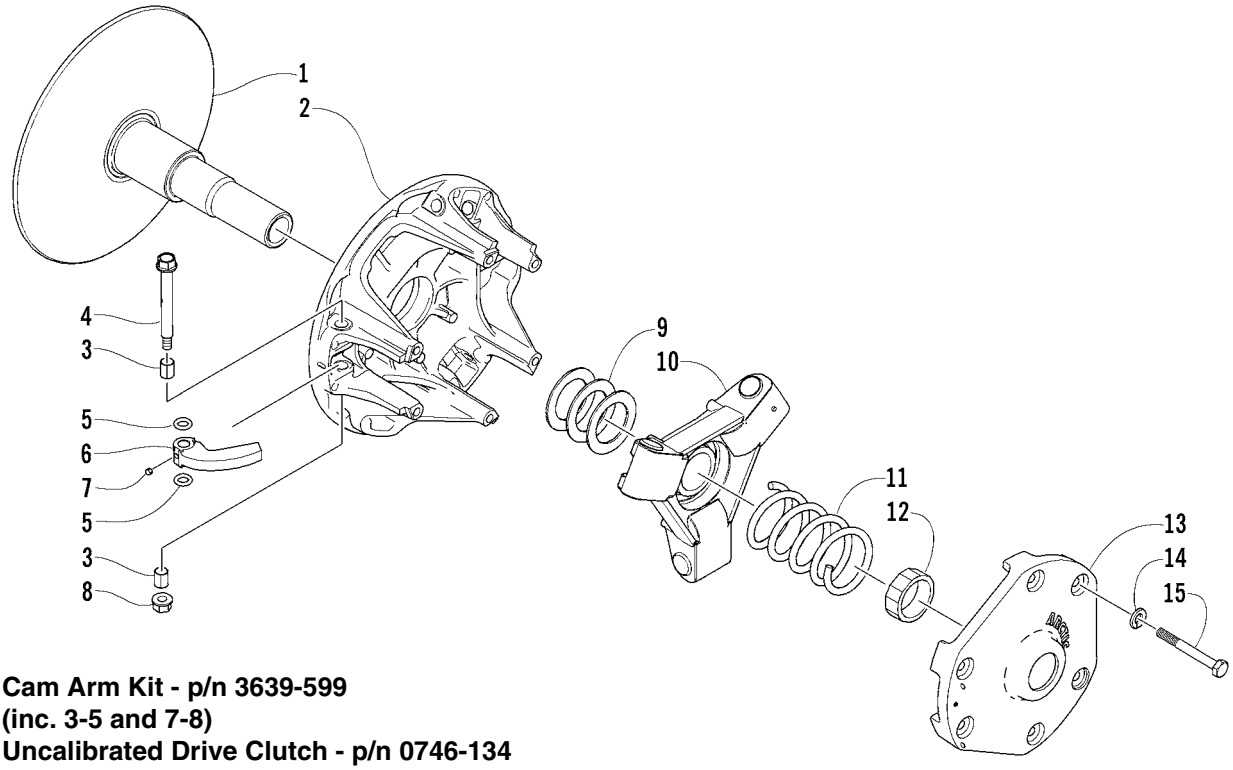

Cam Arm Kit - p/n 3639-599
(inc. 3-5 and 7-8)
Uncalibrated Drive Clutch - p/n 0746-134

DRIVE CLUTCH

(Assembly p/n 0725-396)

0738-469

Ref.	Part No.	Qty.	Description	Ref.	Part No.	Qty.	Description
1	0646-362	1	Sheave, Stationary	8	8048-366	3	Nut, Lock
2	0746-131	1	Sheave, Movable (inc. 3)	9	0646-265	2	Washer, Spacer
3	0646-372	6	● Bearing		0646-266	1	Washer, Spacer
4	0646-344	3	Pin, Cam Arm	10	0746-115	1	Spider Assembly
5	1602-692	6	O-Ring	11	0646-229	1	Spring, Drive Clutch - Yellow/White
6	0746-671	3	Arm, Cam (inc. 7)	12	0646-140	1	Nut
	0746-694	3	Arm, Cam (inc. 7) (5-9,000 ft Alt.)	13	0746-113	1	Cover
	0746-702	3	Arm, Cam (inc. 7) (Over 9,000 ft Alt.)	14	8051-212	6	Washer, Lock - Spring
7	1623-183	3	● Screw, Set	15	1623-085	6	Screw, Machine

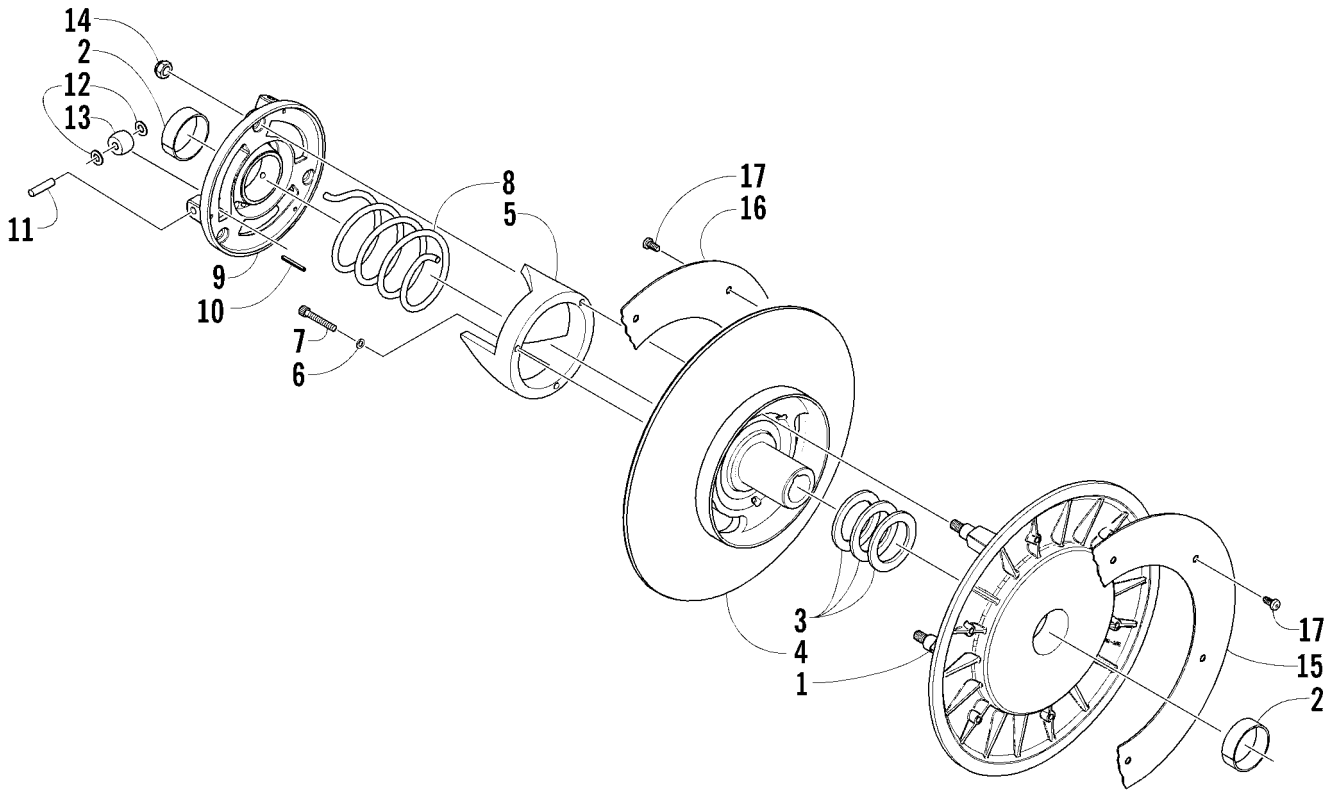

DRIVEN CLUTCH

(Assembly p/n 0726-182)

0737-913

Ref.	Part No.	Qty.	Description	Ref.	Part No.	Qty.	Description
1	0748-023	1	Sheave, Movable (inc. one No. 2)	9	0748-589	1	Plate, Roller - Assembly (inc. one No. 2 and 10-13)
2	0648-009	2	● Bearing				
3	0148-198	2	Washer, Thrust: 0.030 in.	10	8070-224	3	● Pin, Spring
	0148-199	2	Washer, Thrust: 0.060 in.	11	0648-097	3	● Pin, Cam Roller
4	0748-588	1	Sheave, Stationary	12	0648-431	3	● Washer, Spring
5	0648-002	1	Bracket, Torque - 53°		0648-082	3	● Washer, Thrust - Cam Roller
	0148-222	1	Bracket, Torque - 51° (Over 5,000 ft Alt.)	13	0648-079	3	● Roller, Cam
				14	8040-426	3	Nut, Lock
6	8051-152	3	Washer, Lock	15	0148-224	1	Cover, Movable Sheave
7	8005-404	3	Screw, Socket Head	16	0148-225	1	Cover, Stationary Sheave
8	0748-025	1	Spring, Driven Clutch - Cat Green	17	0623-914	12	Screw, Self-Tapping

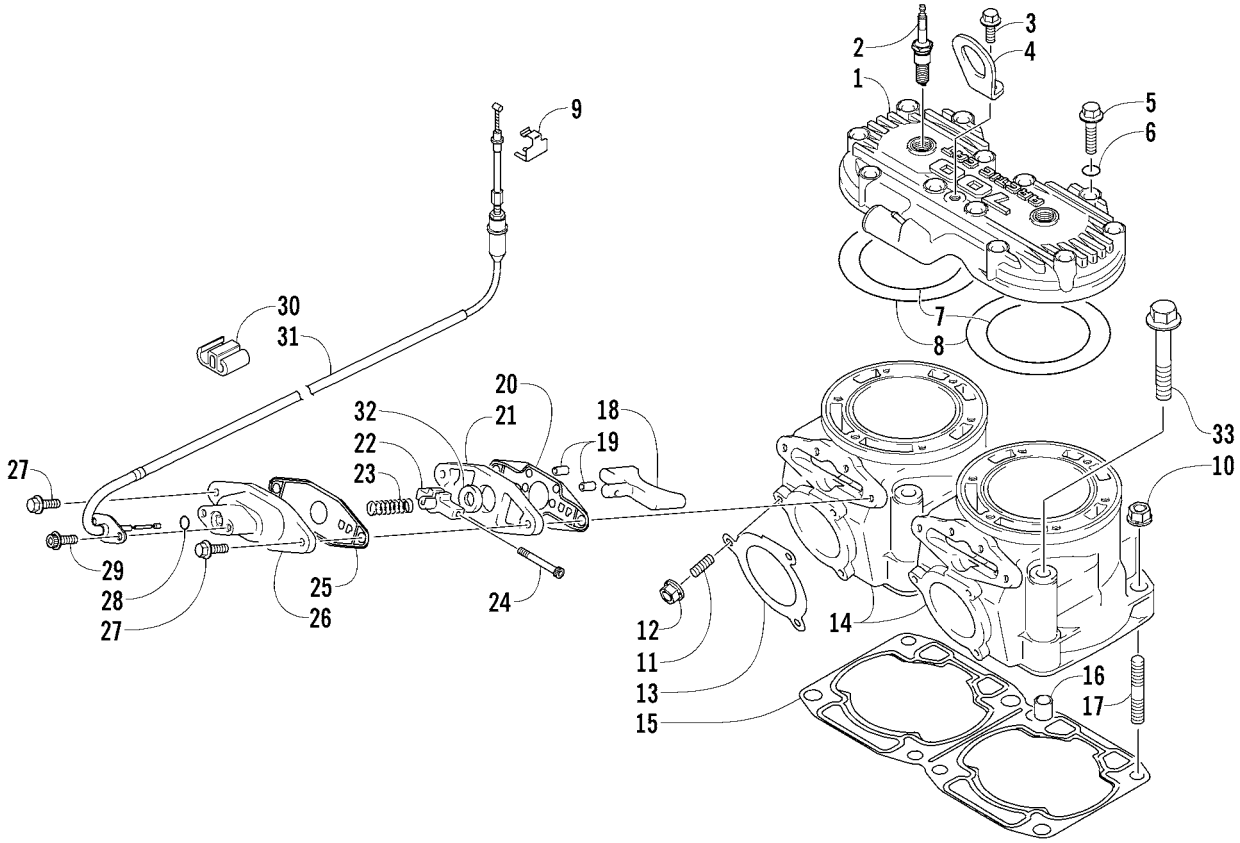

CYLINDER AND HEAD ASSEMBLY

0739-379

Ref.	Part No.	Qty.	Description	Ref.	Part No.	Qty.	Description
1	3006-491	1	Head, Cylinder	18	3006-494	2	Valve, Exhaust
2	0217-709	2	Plug, Spark (BR9EYA)	19	3006-321	4	Pin, Exhaust Valve Dowel
3	3006-544	1	Bolt	20	3006-329	2	Gasket, Exhaust Valve
4	3006-496	1	Hook, Engine	21	3006-495	2	Plate, Exhaust Valve
5	3006-538	12	Bolt	22	3005-860	2	Stopper, Exhaust Valve
6	3003-227	12	O-Ring	23	3006-484	2	Spring
7	3003-335	2	O-Ring	24	3005-983	2	Pin, Exhaust Valve Stopper
8	3006-490	2	O-Ring	25	3006-436	2	Gasket, Exhaust Valve Cover
9	3005-747	1	Holder, Exhaust Valve Cable	26	3006-425	2	Cover, Exhaust Valve
10	3004-491	4	Nut	27	3004-442	4	Bolt
11	3004-279	6	Bolt, Stud	28	3005-226	2	O-Ring
12	3004-326	6	Nut	29	3005-744	4	Bolt
13	3006-516	2	Gasket, Exhaust	30	3005-808	1	Clamp
14	3006-492	2	Cylinder	31	3006-689	2	Cable, Exhaust Valve
15	3006-493	1	Gasket, Cylinder	32	3006-322	2	Seal, Oil
16	3004-975	4	Pin, Dowel	33	3005-846	4	Bolt
17	3005-847	4	Bolt, Stud				

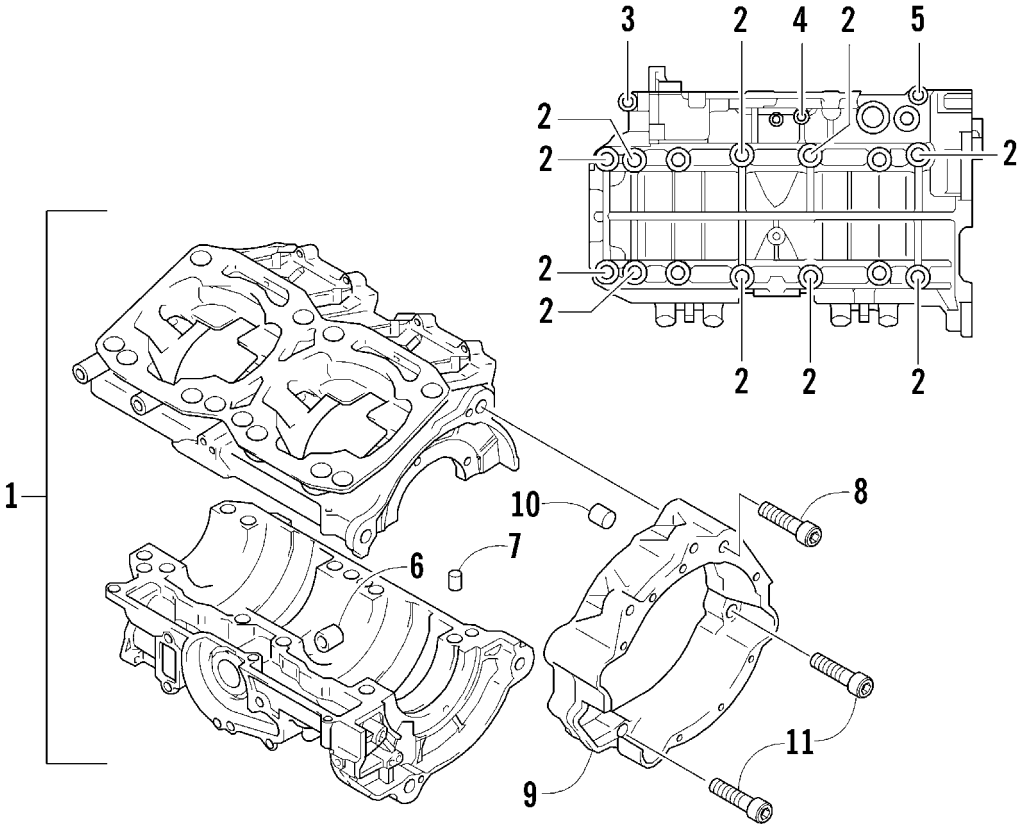

CRANKCASE ASSEMBLY

0739-363

Ref.	Part No.	Qty.	Description	Ref.	Part No.	Qty.	Description
1	3006-924	1	Crankcase (inc. 2-7)	7	3005-206	2	● Pin, Dowel
2	3006-488	10	● Bolt	8	3006-549	2	Bolt
3	3004-376	1	● Bolt	9	3006-498	1	Case, Magneto
4	3006-650	1	● Bolt	10	3006-547	2	Pin, Dowel
5	3004-442	1	● Bolt	11	3006-548	2	Bolt
6	3003-647	1	● Bushing				

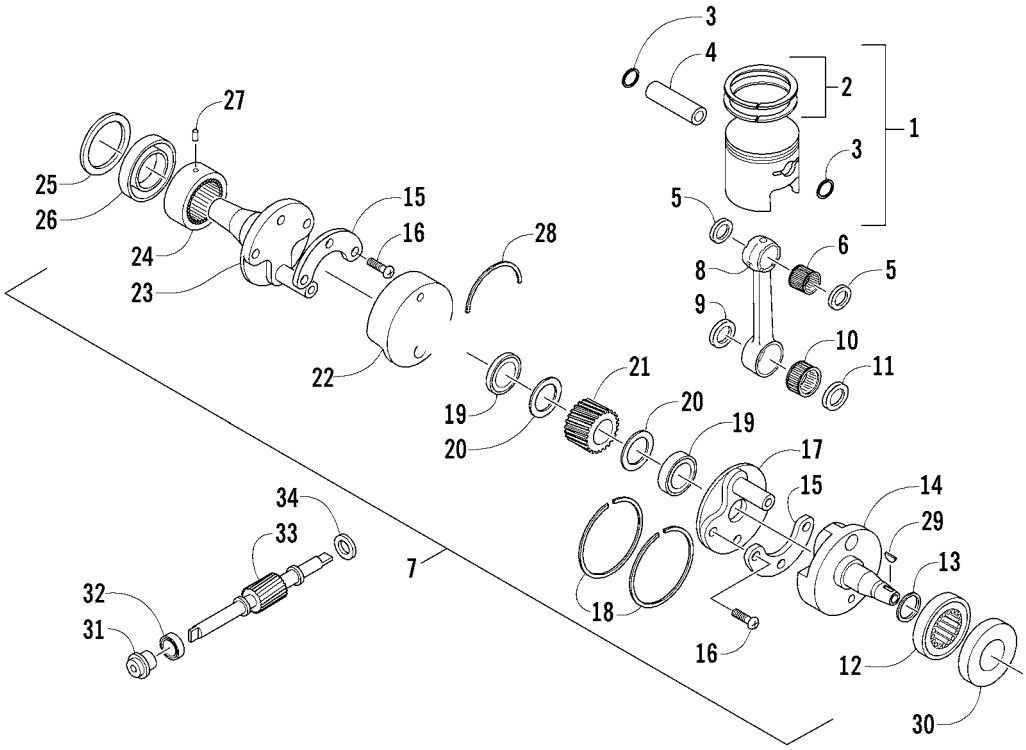

PISTON AND CRANKSHAFT

0739-361

Ref.	Part No.	Qty.	Description	Ref.	Part No.	Qty.	Description
1	3006-499	2	Piston Set (inc. 2-3)	18	3005-508	2	● Ring, Middle Crank Seal
2	3006-500	2	● Ring Set, Piston	19	3008-421	2	● Bearing
3	3005-304	4	● Circlip, Piston	20	3006-508	2	● Race, Middle Crank Seal
4	3006-501	2	Pin, Piston	21	3006-519	1	● Gear, Oil Pump Drive
5	3008-500	4	Washer	22	3006-504	1	● Crankshaft - Middle
6	3008-503	2	Bearing	23	3006-506	1	● Crankshaft - Left
7	3006-718	1	Crankshaft Assembly (inc. 8-24)	24	3006-540	1	● Bearing
8	3005-308	2	● Connecting Rod	25	3006-552	1	Spacer, Oil Seal
9	3004-147	2	● Washer, Crank Pin Bearing	26	3003-759	1	Seal, Oil
10	3008-504	2	● Bearing	27	3003-658	4	Pin, Alignment
11	3006-489	1	● Washer	28	3003-359	1	C-Ring
12	3006-551	1	● Bearing	29	3004-540	1	Key
13	3008-495	2	● Shim	30	3003-367	1	Seal, Oil
14	3006-503	1	● Crankshaft - Right	31	3005-909	1	Seal, Mechanical - Water Pump
15	3006-719	2	● Balancer, Crankshaft	32	3004-760	1	Seal, Water/Oil Pump
16	3004-372	6	● Screw	33	3006-520	1	Gear, Driven - Oil Pump
17	3006-505	1	● Wheel, Crankshaft	34	3423-300	1	Shim, Oil Pump Shaft

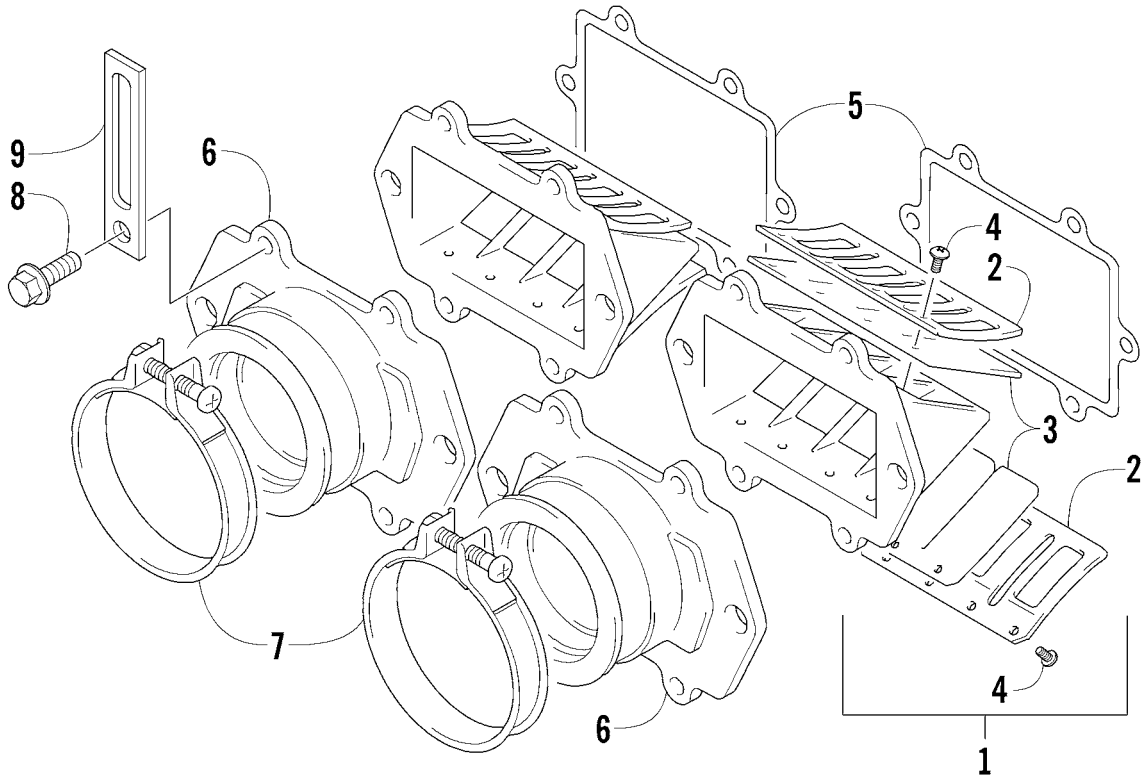

REED VALVE ASSEMBLY

0739-369

Ref.	Part No.	Qty.	Description	Ref.	Part No.	Qty.	Description
1	3006-510	2	Valve, Reed - Assembly (inc. 2-4)	6	3006-527	2	Pipe, Intake
2	3006-553	4	● Stopper	7	3004-463	2	Clamp
3	3005-878	4	● Valve, Reed	8	3004-376	12	Bolt
4	3004-506	16	● Screw	9	3002-964	1	Clamp, Wire
5	3005-879	2	Gasket, Reed Valve				

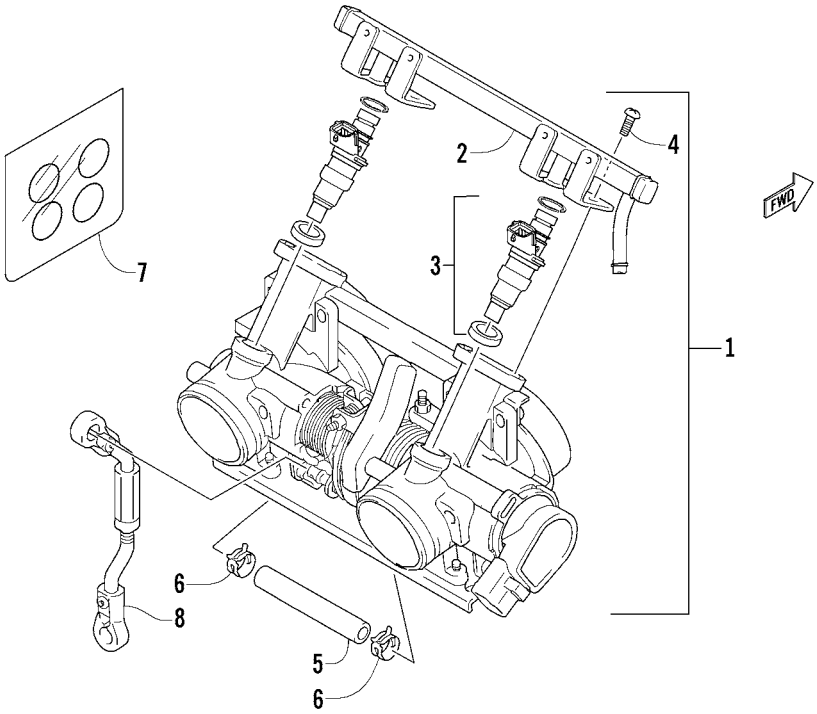

THROTTLE BODY ASSEMBLY

0739-367

Ref.	Part No.	Qty.	Description	Ref.	Part No.	Qty.	Description
1	3006-720	1	Body, Throttle - Assembly ● (inc. 2-7)	4	3423-166	4	● Screw
	3006-721	1	Body, Throttle - Assembly ■ (inc. 2-7)	5	3006-723	1	● Hose
	3006-722	1	Body, Throttle - Assembly ▲ (inc. 2-7)	6	3004-193	2	● Clamp, Hose
2	3006-517	1	● Pipe, Delivery	7	3005-692	1	● O-Ring Set (inc. All Throttle Body O-Rings)
3	3006-059	2	● Injector, Fuel - Assembly ●				
	3006-060	2	● Injector, Fuel - Assembly ■	8	3006-514	1	Rod, Control - Oil Pump
	3006-061	2	● Injector, Fuel - Assembly ▲				

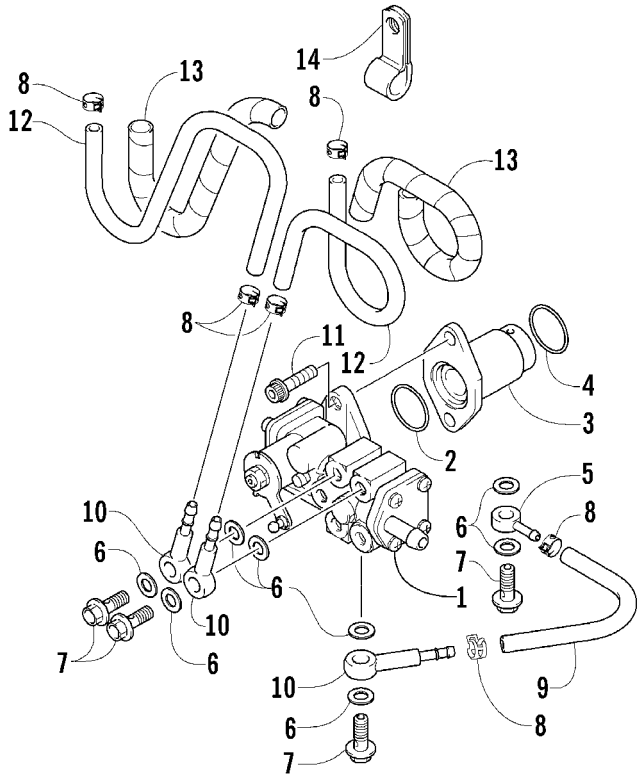

OIL PUMP

0739-371

Ref.	Part No.	Qty.	Description	Ref.	Part No.	Qty.	Description
1	3006-724	1	Pump, Oil	8	3008-037	6	Clamp, Hose
2	3008-030	1	O-Ring	9	3005-357	1	Hose
3	3005-884	1	Retainer, Oil Pump Input Shaft	10	3003-217	3	Valve, Check
4	3005-126	1	O-Ring	11	3004-893	2	Bolt
5	3003-661	1	Union	12	3008-035	2	Hose, Oil
6	3402-009	8	Gasket	13	3005-032	2	Protector, Hose
7	3004-346	4	Bolt	14	3005-696	1	Clamp

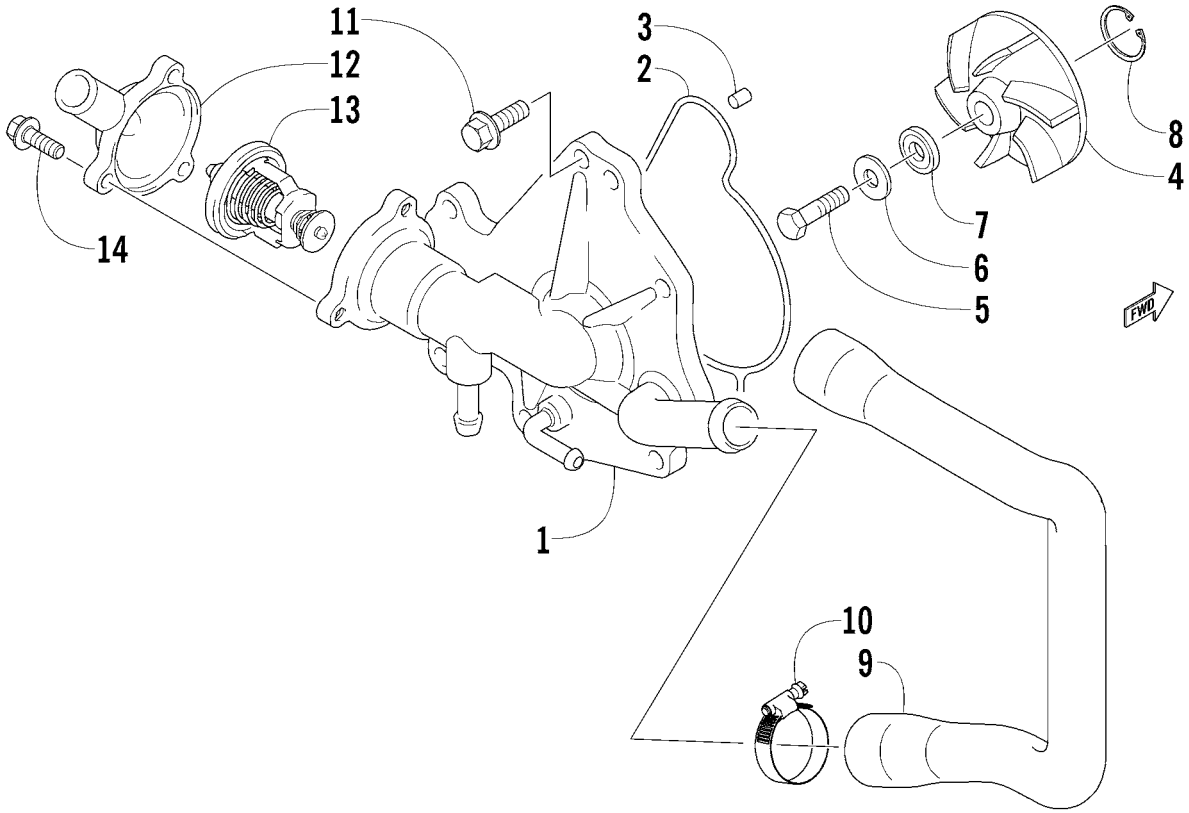

WATER PUMP AND THERMOSTAT

0739-372

Ref.	Part No.	Qty.	Description	Ref.	Part No.	Qty.	Description
1	3006-942	1	Cover, Water Pump	8	3004-009	4	Circlip
2	3006-356	1	O-Ring, Water Pump Cover	9	3006-521	1	Hose, Water Inlet
3	3005-899	2	Pin, Dowel	10	3006-324	2	Clamp
4	3005-697	1	Impeller, Water Pump	11	3004-341	6	Bolt
5	3003-426	1	Bolt	12	3006-914	1	Cap, Thermostat
6	3003-431	1	Washer	13	3006-913	1	Thermostat
7	3003-432	1	Gasket	14	3004-512	3	Bolt

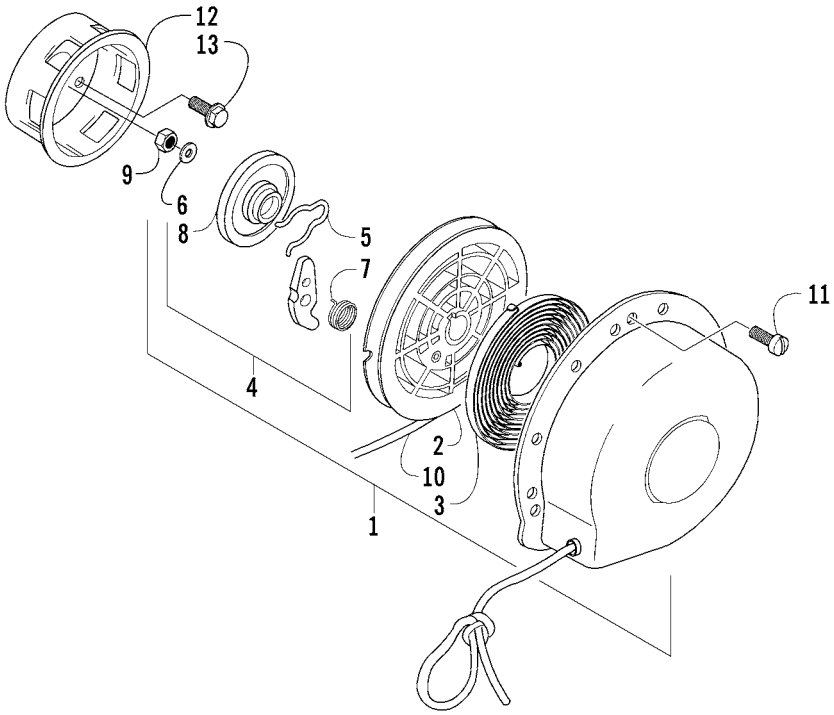

RECOIL STARTER

0739-364 *Not a Service Part

Ref.	Part No.	Qty.	Description	Ref.	Part No.	Qty.	Description
1	3006-915	1	Starter Assembly (inc. 2-10)	8	3006-475	1	● Plate, Friction
2	3003-179	1	● Roller, Starter	9	3006-456	1	● Nut
3	3002-921	1	● Spring	10	3006-889	1	● Rope, Starter
4	3006-457	1	● Ratchet Set (inc. 5-7)	11	3004-383	4	Screw, Cap
5	*	1	● ● Spring, Friction	12	3006-522	1	Pulley, Starter
6	*	1	● ● Washer	13	3004-705	3	Screw, Cap
7	*	1	● ● Spring, Return				

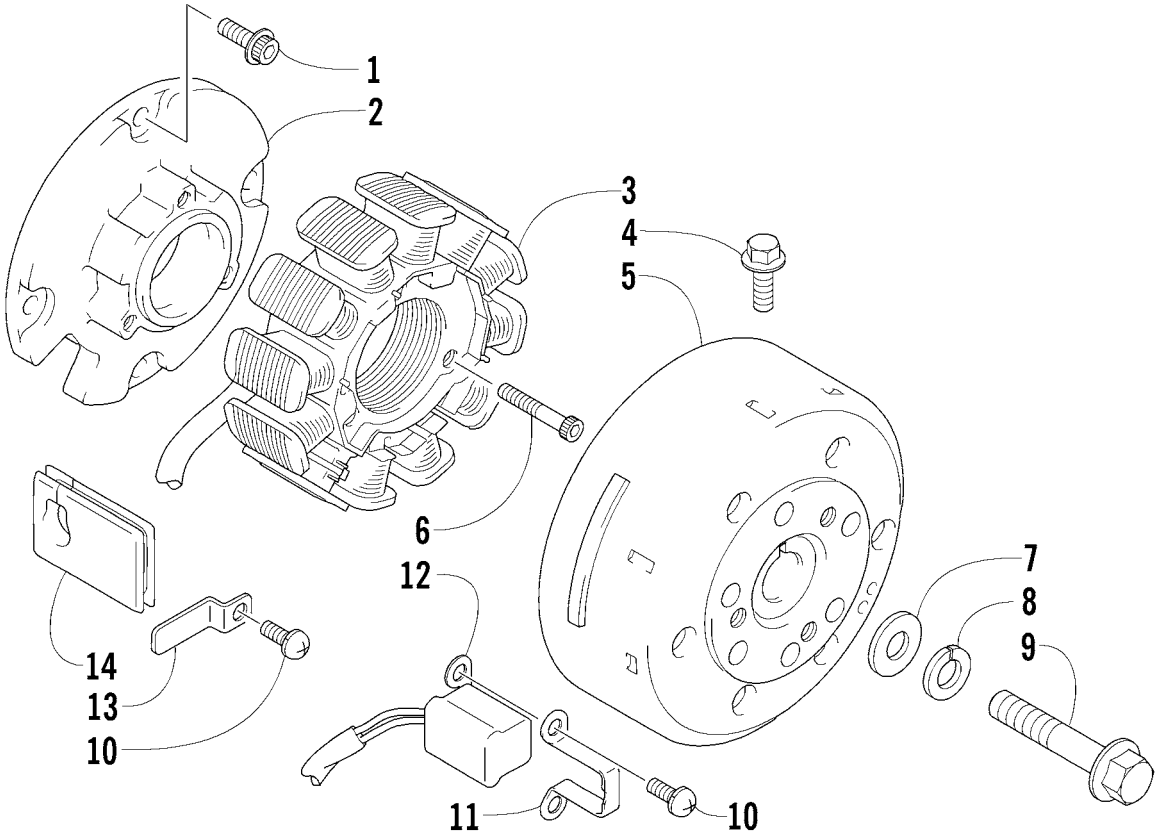

MAGNETO

0739-373

Ref.	Part No.	Qty.	Description	Ref.	Part No.	Qty.	Description
1	3004-378	4	Bolt	8	3004-362	1	Washer, Lock
2	3006-524	1	Base, Stator - Plate	9	3006-476	1	Bolt
3	3006-943	1	Stator	10	3004-706	3	Screw
4	3004-338	1	Bolt	11	3003-972	1	Clamp, Sensor
5	3006-523	1	Rotor/Flywheel	12	3006-453	1	Sensor, Ignition Timing
6	3005-524	3	Bolt	13	3005-960	1	Plate, Stator Lead Wire
7	3005-987	1	Washer	14	3005-775	1	Grommet, Stator Lead Wire

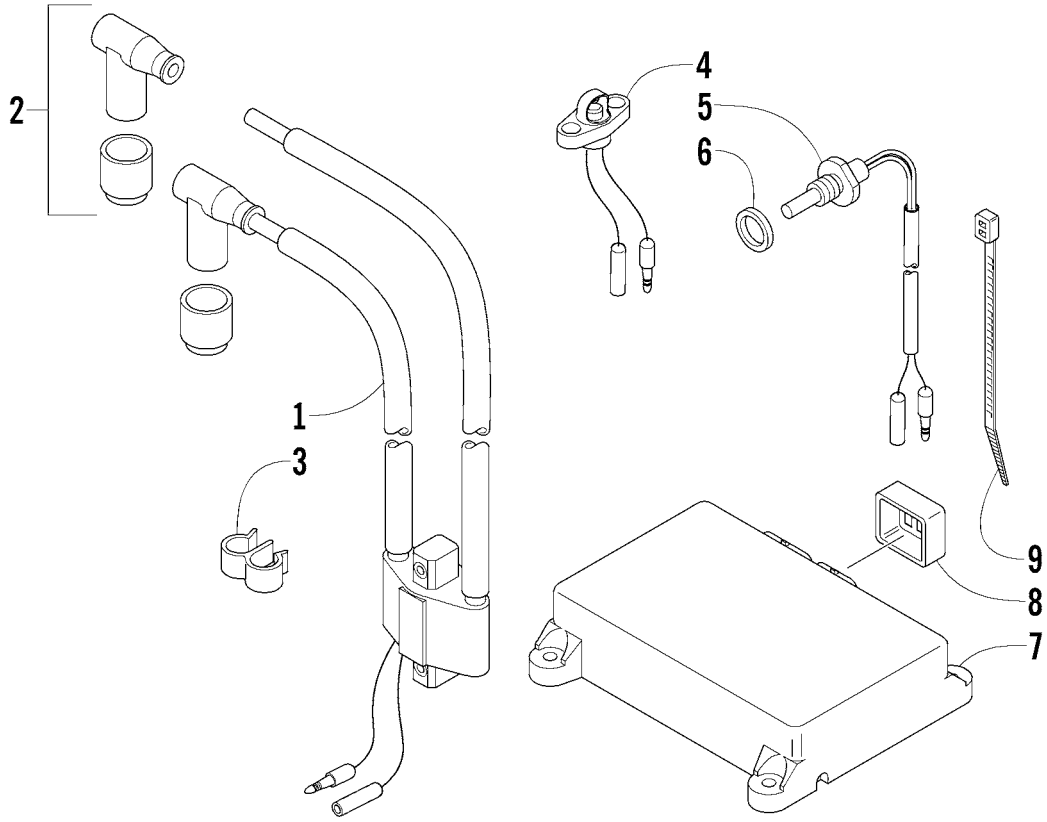

ELECTRICAL

0739-412

Ref.	Part No.	Qty.	Description	Ref.	Part No.	Qty.	Description
1	3006-692	1	Coil, Ignition - Assembly	7	3006-932	1	ECU ●
2	3006-367	2	Cap, Spark Plug		3006-933	1	ECU ■
3	3005-387	1	Clamp		3006-934	1	ECU ▲
4	3006-728	1	Sensor, Temperature	8	3005-908	1	Cap, Rubber
5	3006-725	1	Sensor, Coolant	9	3005-237	1	Cable Tie
6	3005-233	1	Washer, Coolant Sensor				

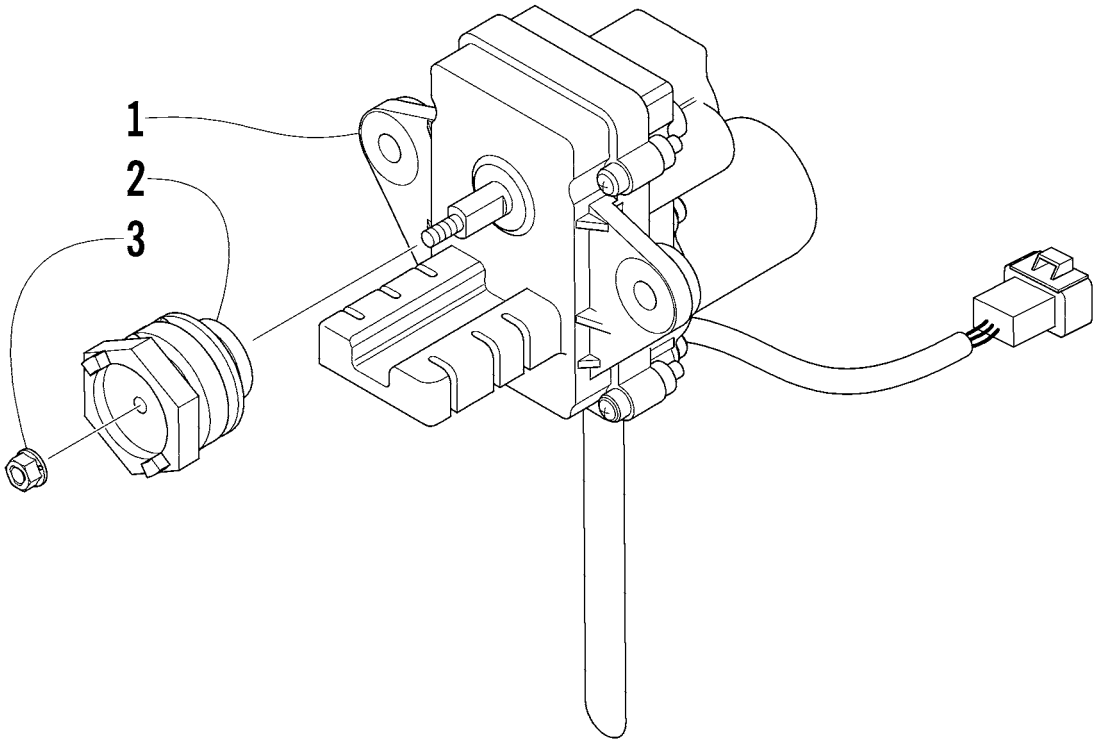

SERVOMOTOR ASSEMBLY

0739-377

Ref.	Part No.	Qty.	Description	Ref.	Part No.	Qty.	Description
1	3006-699	1	Servomotor	3	3006-700	1	Nut
2	3005-661	1	Pulley, Controller				

RELATED ITEMS

2005 Sabercat 700 EFI

(Model No. S2005SCFXEOSR - EXT Red)

3639-558	Altitude Kit (5-9000 ft) - EXT
3639-559	Altitude Kit (Over 9000 ft) - EXT
3639-020	Cover, Machine (Storage) - EXT
3639-656	Cover, Machine (Deluxe) - EXT
2257-231	Handbook, Safety (E/F)
3639-718	Handlebar Bag
0639-456	Handlebar Muffs
2257-085	Manual, Operator's (E/F)
0652-100	Paint, Hood - Black (1/2 oz)
0652-024	Paint, Metal - Black
2639-582	Skid Plate (Black)
3639-700	Tank Jacket - Gray Trim
3639-596	Trunk Liner Bag
3639-715	Windshield, Storage Bag
3639-692	Windshield, High

■**NOTE: For a complete list of related items, refer to the current accessory catalog.**

ARCTIC CAT®

Printed in U.S.A **p/n 2257-121 Overseas Edition**