2017

Parts Manual

M 8000 LTD 153 INTERNATIONAL

S2017M8HPSOSO

ARCTIC CAT®

SHARE OUR PASSION.™

www.arcticcat.com

Contents

A-ARM ASSEMBLY [102268] . . . 1
BELT GUARD ASSEMBLY [103938] . . . 2
CHAIN CASE ASSEMBLY [104631] . . . 3
CONSOLE ASSEMBLY [104462] . . . 5
COOLING ASSEMBLY [104636] . . . 6
CRANKCASE ASSEMBLY [91585] . . . 8
CYLINDER AND HEAD ASSEMBLY [95146] . . . 9
DRIVE CLUTCH [104628] . . . 11
DRIVE TRAIN SHAFTS AND BRAKE ASSEMBLIES [103897] . . . 12
DRIVEN CLUTCH [104629] . . . 14
ELECTRICAL [101350] . . . 15
ENGINE AND RELATED PARTS [103915] . . . 16
EXHAUST ASSEMBLY [103916] . . . 18
FRONT BUMPER AND FRAME ASSEMBLY [104619] . . . 19
FRONT SHOCK ABSORBER ASSEMBLY [104062] . . . 21
FRONT SUSPENSION SHOCK ABSORBER [102298] . . . 22
FUEL PUMP ASSEMBLY [102910] . . . 23
GAS TANK ASSEMBLY [102909] . . . 24
HANDLEBAR AND CONTROLS [103896] . . . 25
HEADLIGHT AND WIRING ASSEMBLIES [103967] . . . 27
HOOD AND AIR INTAKE ASSEMBLY [104635] . . . 28
HYDRAULIC BRAKE CONTROL ASSEMBLY [97987] . . . 30
IDLER WHEEL ASSEMBLY [103900] . . . 31
MAGNETO [89829] . . . 33
OIL PUMP [93329] . . . 34
OIL TANK ASSEMBLY [100501] . . . 35
PISTON AND CRANKSHAFT [91586] . . . 36
REAR SUSPENSION FRONT ARM ASSEMBLY [104150] . . . 38
REAR SUSPENSION FRONT ARM SHOCK ABSORBER [103902] . . . 39
REAR SUSPENSION REAR ARM ASSEMBLY [104180] . . . 40
REAR SUSPENSION REAR ARM SHOCK ABSORBER [103904] . . . 41
RECOIL STARTER [89828] . . . 42
REED VALVE ASSEMBLY [96875] . . . 43
SEAT ASSEMBLY [104626] . . . 44
SERVOMOTOR ASSEMBLY [91541] . . . 45
SKI AND SPINDLE ASSEMBLY [104630] . . . 46
SKID PLATE AND SIDE PANEL ASSEMBLY [104525] . . . 47
SLIDE RAIL AND TRACK ASSEMBLY [104632] . . . 50
STEERING POST ASSEMBLY [103895] . . . 52
STEERING SUPPORT ASSEMBLY [103905] . . . 54
THROTTLE BODY ASSEMBLY [91588] . . . 56
TIE ROD ASSEMBLY [102614] . . . 57
TUNNEL, REAR BUMPER, AND SNOWFLAP ASSEMBLY [104634] . . . 58
WATER PUMP AND THERMOSTAT [93330] . . . 61
WINDSHIELD AND INSTRUMENTS ASSEMBLIES [104623] . . . 62

A-ARM ASSEMBLY [102268]

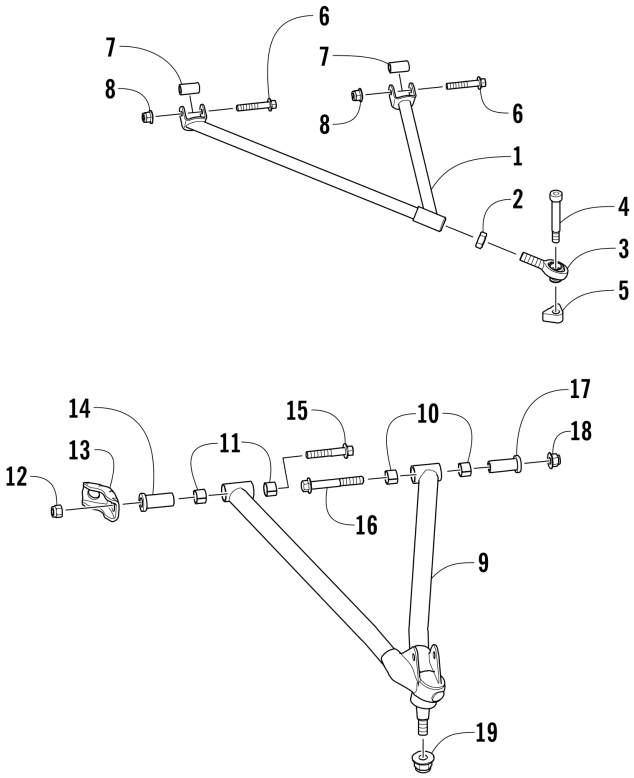

Item	Part No.	New Part	Qty	Name	Context	Footnote
1	3703-441		2	A-Arm, Upper - White	(inc. 2-3)	
2	8420-202		2	Nut		
3	1605-151		2	Bearing, End		
4	2623-067		2	Screw, Shoulder		
5	2623-066		2	Tri Nut		
6	8413-645		4	Screw, Cap		
7	3603-258		4	Axle		
8	8437-604		4	Nut, Lock		
9	3703-320		1	A-Arm, Lower Right - White	(inc. two No. 10-11)	
9	3703-321		1	A-Arm, Lower Left - White	(inc. two No. 10-11)	
10	1603-895		4	Bearing		
11	2603-911		4	Bearing		
12	1623-965		2	Nut, Lock		
13	2603-909		1	Brace, Lower A-Arm - Front		
14	2603-916		2	Axle, Inner - Lower A-Arm - Front		
15	1623-953		2	Screw, Cap		
16	8409-075		2	Screw, Cap		
17	3603-259		2	Axle, Lower A-Arm - Rear		
18	8427-002		2	Nut, Lock		
19	8427-202		2	Nut, Lock		

BELT GUARD ASSEMBLY [103938]

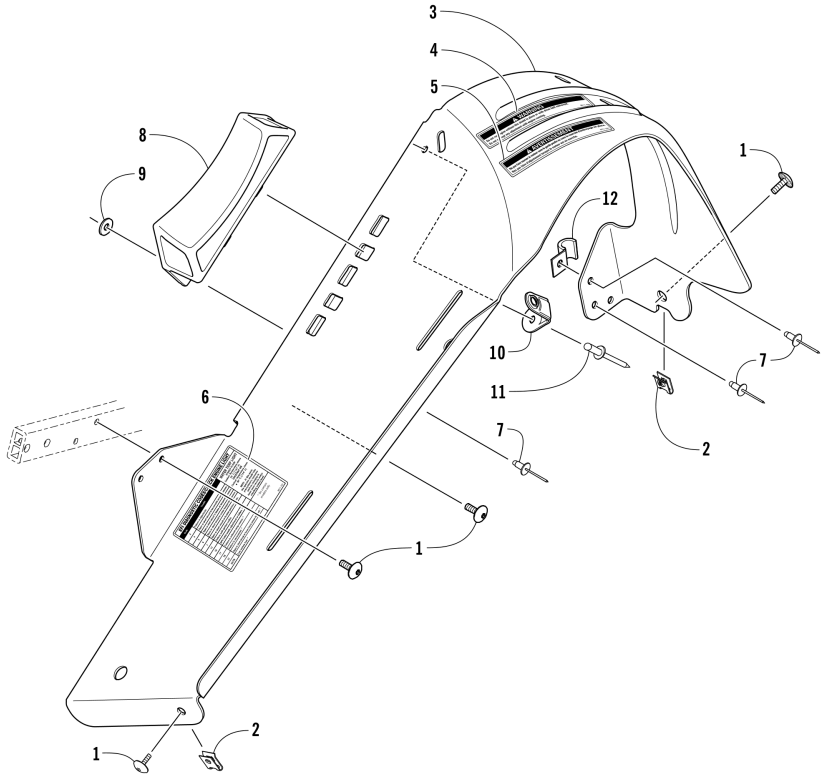

Item	Part No.	New Part	Qty	Name	Context	Footnote
1	0623-797		4	Screw, Self-Tapping		
2	1623-052		2	Clip, U-Nut		
3	2707-278		1	Guard, Belt	(inc. 4-5)	
4	9611-690		1	Decal, Warning (English)		
5	9611-691		1	Decal, Warning (French)		
6	9611-743		1	Decal, EFI Diagnostic Codes		
7	8060-688		2	Rivet		
8	3612-016		1	Pad, Mounting		
9	0123-802		1	Washer		
10	3612-037		1	Tab, Resonator Mount		
11	1623-130		1	Rivet		
12	1623-786		1	Clamp, Wire		

CHAIN CASE ASSEMBLY [104631]

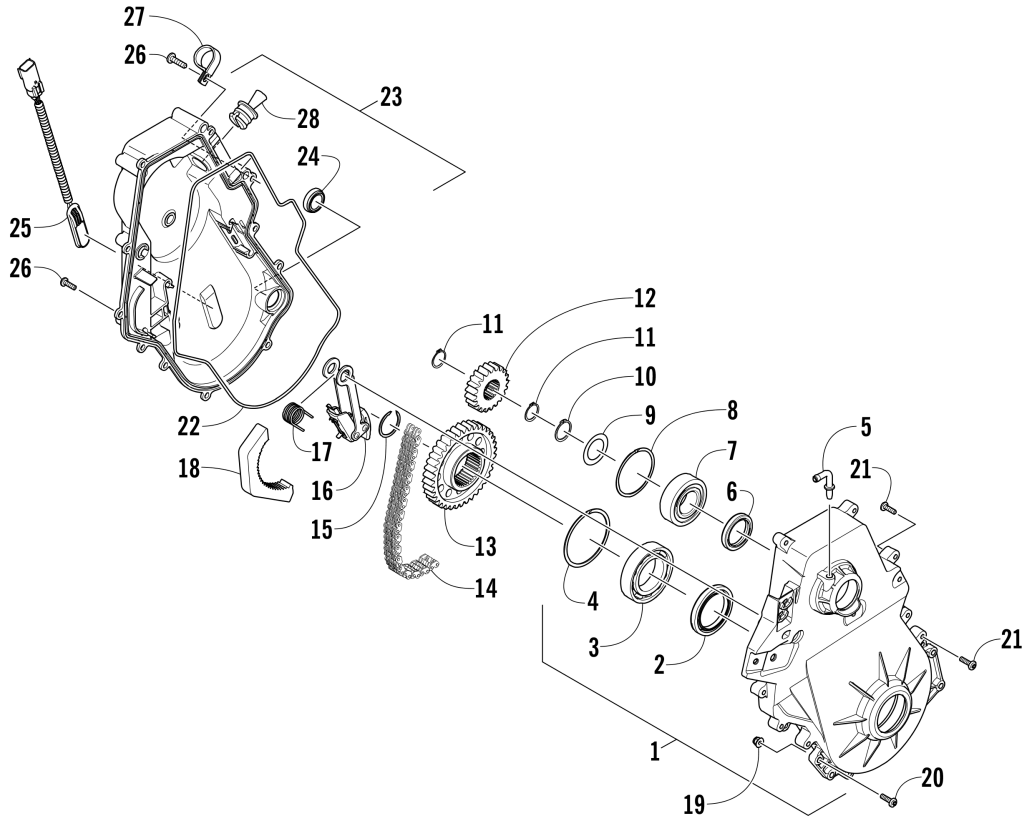

Item	Part No.	New Part	Qty	Name	Context	Footnote
1	1702-451		1	Chain Case Assembly	(inc. 2-8)	
2	2602-172		1	Seal		
3	2602-281		1	Bearing		
4	2602-280		1	Ring, Retaining		
5	2602-641		1	Fitting, Elbow		
6	2602-204		1	Seal		
7	2602-734		1	Bearing		
8	2602-236		1	Ring, Retaining		
9	3602-028		AR	Washer, Shim (.060 in.)		
10	1423-175		1	Ring, Retaining		
11	1623-690		2	Ring, Retaining		
12	2602-823		1	Sprocket - 19T (13 Wide)		
13	2602-746		1	Sprocket - 50T (13 Wide)		
14	2602-760		1	Chain - 90P (13 Wide)		
15	2602-629		1	Ring, Retaining		
16	1702-398		1	Arm, Tensioner - Assembly		
17	2602-336		1	Spring		
18	2602-230		1	Plate, Ratchet		
19	8427-602		4	Nut, Lock		
20	8476-630		4	Screw, Machine		
21	1623-814		6	Screw, Machine		
22	2602-817		1	Seal, Chain Case		
23	1702-445		1	Cover, Chain Case	(inc. 24-25)	

Item	Part No.	New Part	Qty	Name	Context	Footnote
24	2602-232		1	Glass, Sight		
25	0730-172		1	Kit, Speedometer Sensor		
26	8468-626		11	Screw, Machine		
27	1623-984		AR	Clamp, Routing		
28	2602-440		1	Plug, Fill		

CONSOLE ASSEMBLY [104462]

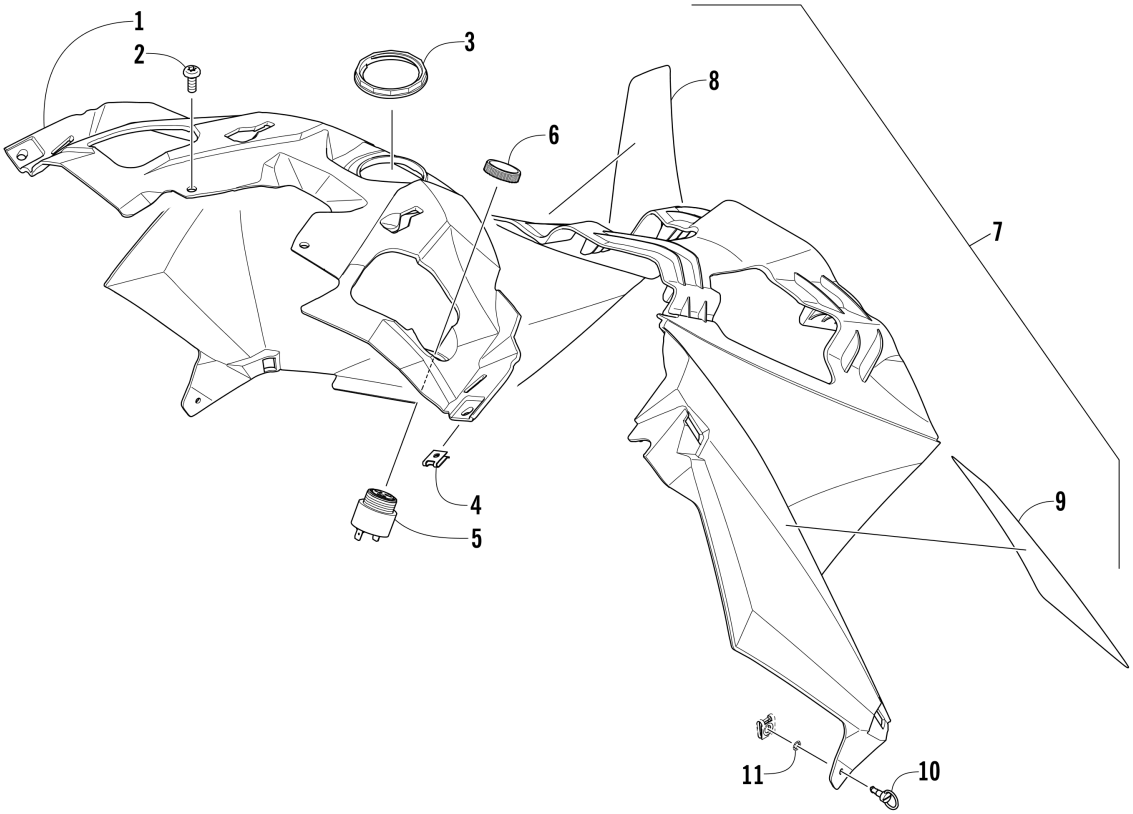

Item	Part No.	New Part	Qty	Name	Context	Footnote
1	6606-308		1	Console, Upper - White		
2	0423-396		2	Screw, Self-Tapping		
3	6606-390		1	Nut, Retaining		
4	1623-939		2	Clip, U-Nut		
5	0630-243		1	Alarm, Reverse	(inc. 6)	
6	0630-017		1	Ring, Retaining		
7	3718-998		1	Console, Lower, w/Warning Decals - Black	(inc. 8-9)	
8	9611-499		1	Decal, Warning - English		
9	9611-498		1	Decal, Warning - French		
10	2623-003		2	Pin, Retaining		
11	2623-004		2	Nut, Push		

COOLING ASSEMBLY [104636]

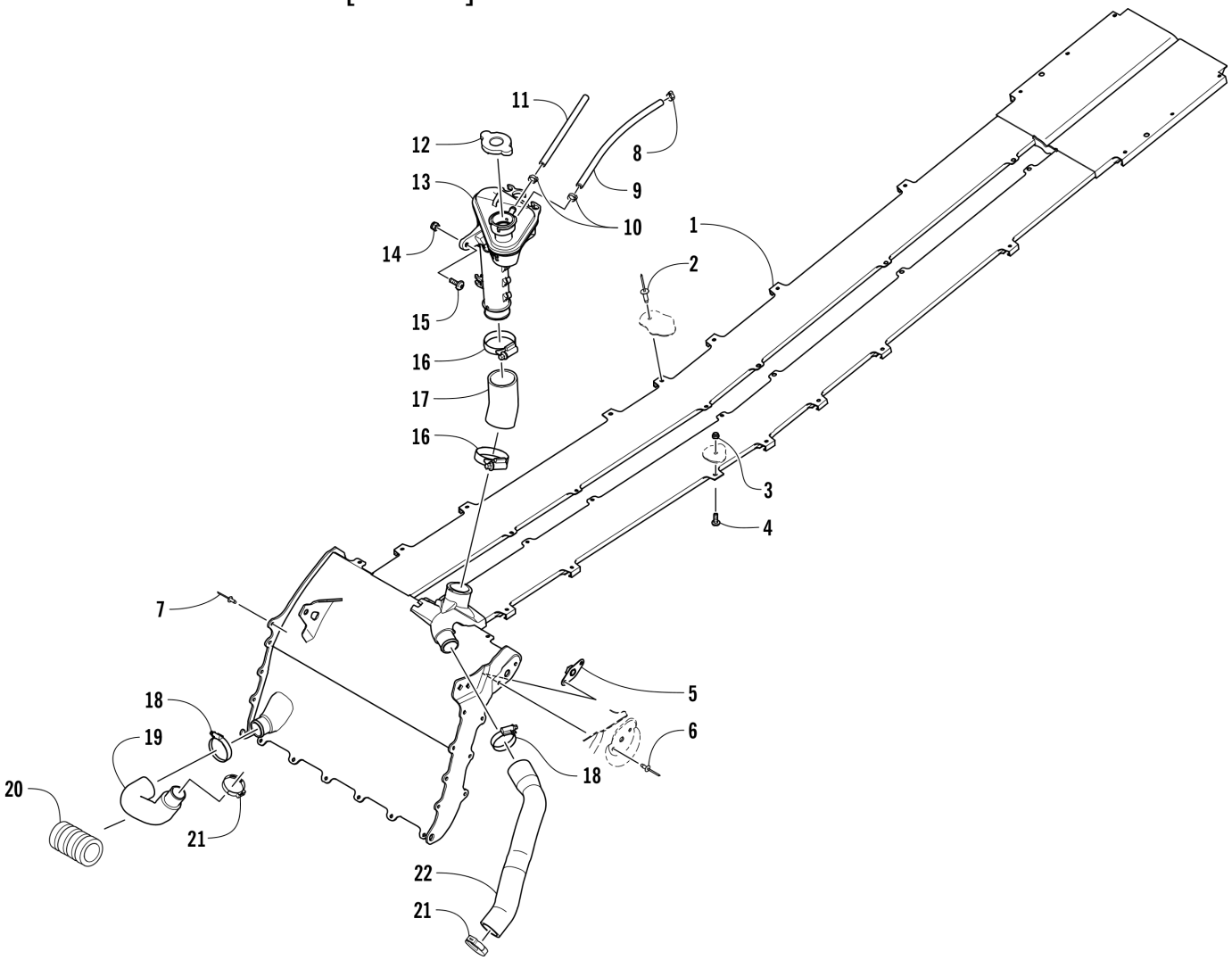

Item	Part No.	New Part	Qty	Name	Context	Footnote
1	0713-113		1	Exchanger, Heat		
2	8060-682		AR	Rivet		
3	8422-502		2	Nut, Lock		
4	8476-516		2	Screw, Machine		
5	0608-631		1	Plate, Retaining		
6	8060-688		AR	Rivet		
7	8060-686		AR	Rivet		
8	1623-619		1	Clamp, Hose		
9	0610-538		AR	Hose - 25 ft		
10	1623-655		2	Clamp, Hose		
11	0610-692		AR	Hose - Green - 25 ft		
11	0610-693		AR	Hose - Green - 100 ft		
12	2606-284		1	Cap		
13	0613-135		1	Tank, Coolant		
14	8422-602		1	Nut		
15	8476-625		1	Screw, Machine		
16	0423-317		2	Clamp		
17	0610-936		1	Hose, Coolant - Filler Neck/Heat Exchanger		
18	2623-088		2	Clamp, Hose		

Item	Part No.	New Part	Qty	Name	Context	Footnote
19	0610-864		1	Hose, Coolant - Engine/Heat Exchanger		
20	0619-619		1	Conduit, Flexible - 4 in.		
21	1623-656		2	Clamp, Hose		
22	0613-191		1	Hose		

CRANKCASE ASSEMBLY [91585]

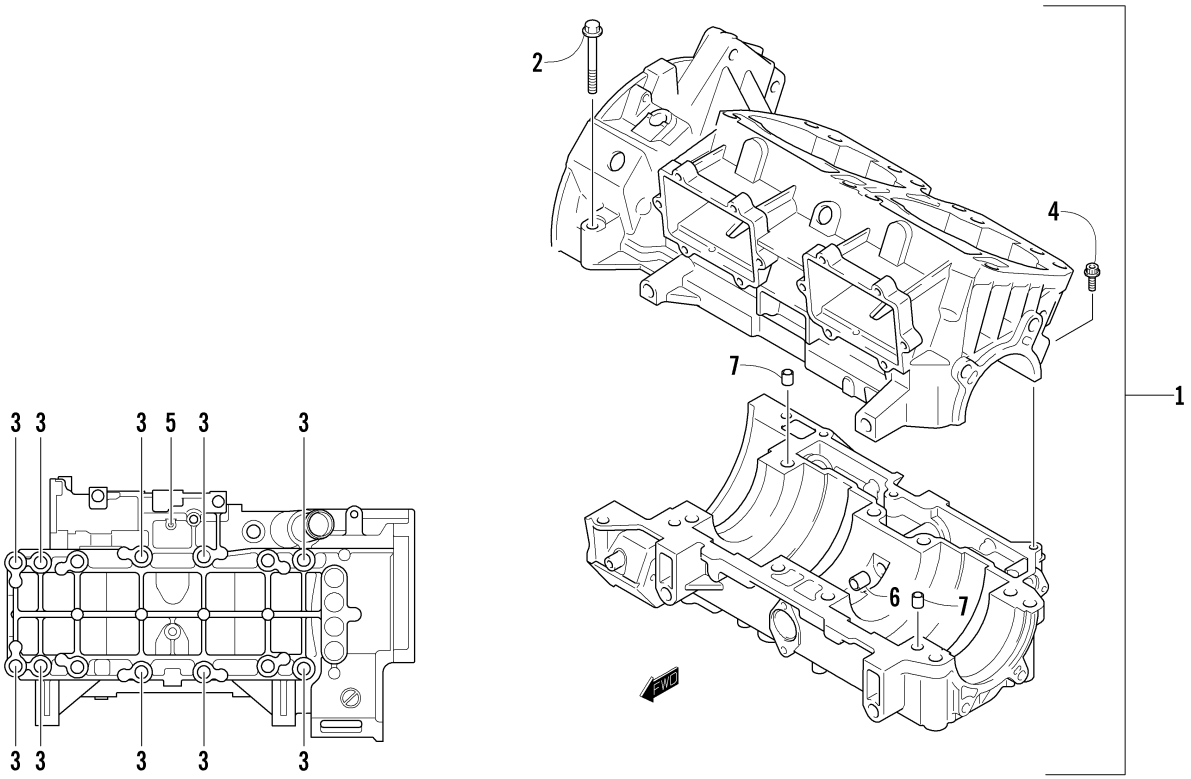

Item	Part No.	New Part	Qty	Name	Context	Footnote
-	5639-520		1	Gasket Set		
1	3007-876		1	Crankcase	(inc. 2-7)	
2	3006-538		2	Screw, Cap		
3	3006-488		10	Screw, Cap		
4	3007-445		2	Screw, Cap		
5	3007-527		1	Screw, Cap		
6	3003-647		1	Bushing		
7	3005-206		2	Pin		

CYLINDER AND HEAD ASSEMBLY [95146]

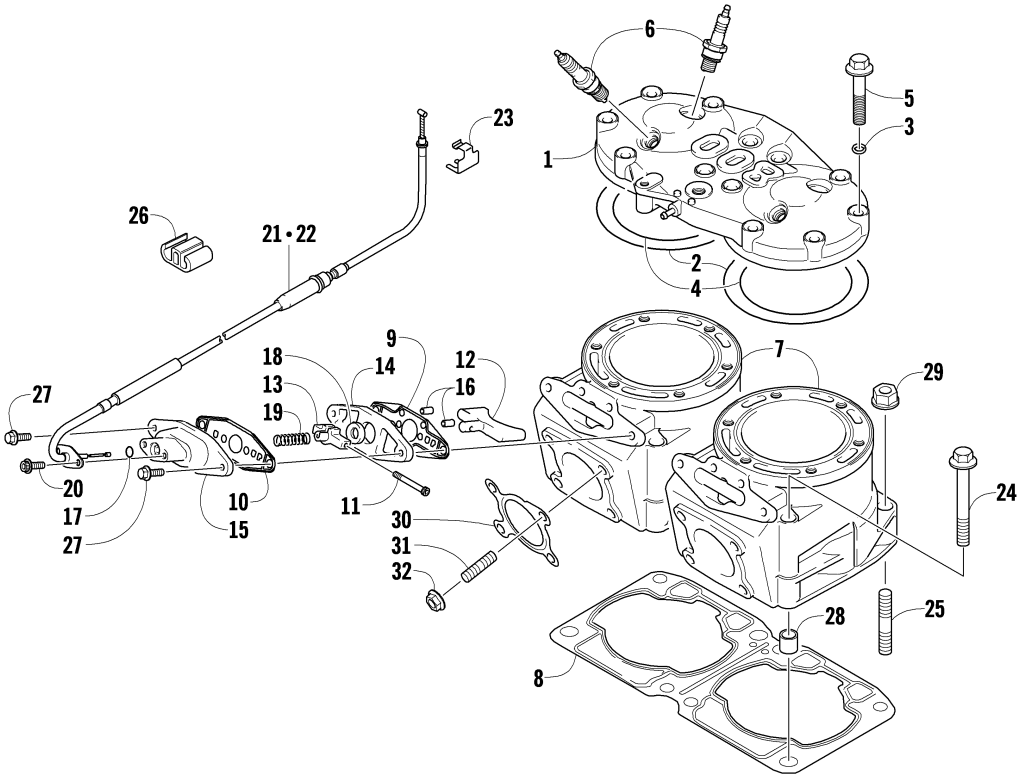

Item	Part No.	New Part	Qty	Name	Context	Footnote
1	3007-873		1	Head, Cylinder		
2	3004-081		2	O-Ring		
3	3003-227		12	O-Ring		
4	3005-854		2	O-Ring		
5	3006-538		12	Screw, Cap		
6	0217-709		4	Plug, Spark		BR9EYA
7	3007-849		2	Cylinder		
8	3007-874		1	Gasket, Cylinder		
9	3007-705		2	Gasket, Exhaust Valve Case		
10	3006-436		2	Gasket, Exhaust Valve Cover		
11	3005-983		2	Pin, Exhaust Valve		
12	3007-875		2	Valve, Exhaust		
13	3005-860		2	Stopper, Exhaust Valve		
14	3006-495		2	Plate, Exhaust Valve		
15	3006-425		2	Cover, Exhaust Valve		
16	3006-321		4	Pin, Dowel		
17	3005-226		2	O-Ring		
18	3007-731		2	Seal, Oil		
19	3006-484		2	Spring		
20	3007-433		4	Bolt		
21	3007-456		1	Cable, Exhaust Valve - Short		
22	3007-455		1	Cable, Exhaust Valve - Long		
23	3005-747		1	Holder, Exhaust Valve Cable		

Item	Part No.	New Part	Qty	Name	Context	Footnote
24	3007-525		4	Screw, Cap		
25	3005-847		4	Bolt, Stud		
26	3005-808		1	Clamp, Exhaust Valve Cable		
27	3007-434		4	Screw, Cap		
28	3004-975		4	Pin, Dowel		
29	3007-391		4	Nut		
30	3007-889		2	Gasket, Exhaust		
31	3007-415		8	Bolt, Stud		
32	3007-390		8	Nut		

DRIVE CLUTCH [104628]

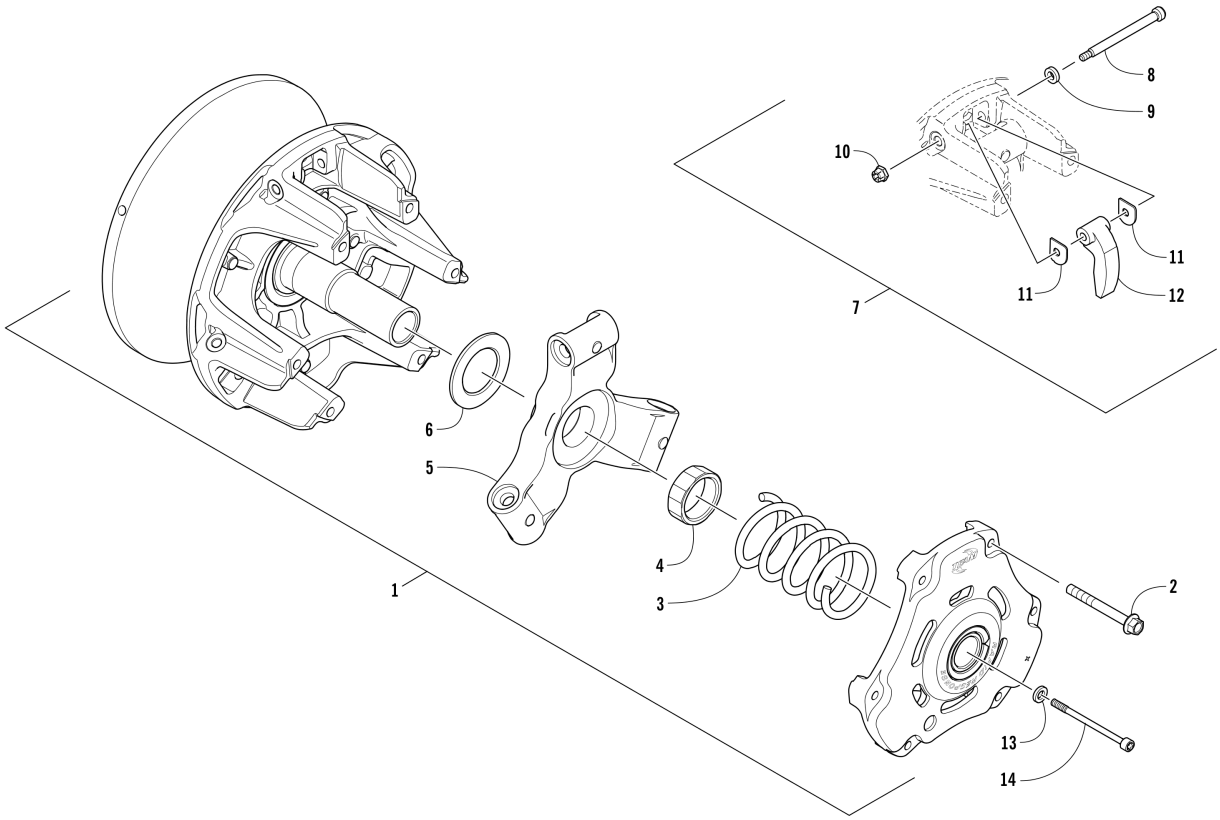

Item	Part No.	New Part	Qty	Name	Context	Footnote
1	0746-881		1	Clutch, Drive - Uncalibrated	(inc. 2, 4-6, and 8-11)	
2	0646-950		6	Screw, Shoulder		
3	0646-877		1	Spring, Drive Clutch		
4	0646-466		1	Nut, Jam		
5	0646-957		1	Spider		
6	0646-964		1	Shim		
6	0646-949		1	Shim		
6	0646-965		1	Shim		
7	7639-127		1	Kit, Cam Arm	(inc. 8-11)	
8	0823-396		3	Pin, Cam Arm		
9	2623-091		3	Washer		
10	0823-399		3	Nut, Lock		
11	0646-880		6	Washer, Thrust		
12	0646-894		3	Arm, Cam		
13	1623-649		1	Washer, High Collar		
14	2623-180		1	Bolt, Clutch		

DRIVE TRAIN SHAFTS AND BRAKE ASSEMBLIES [103897]

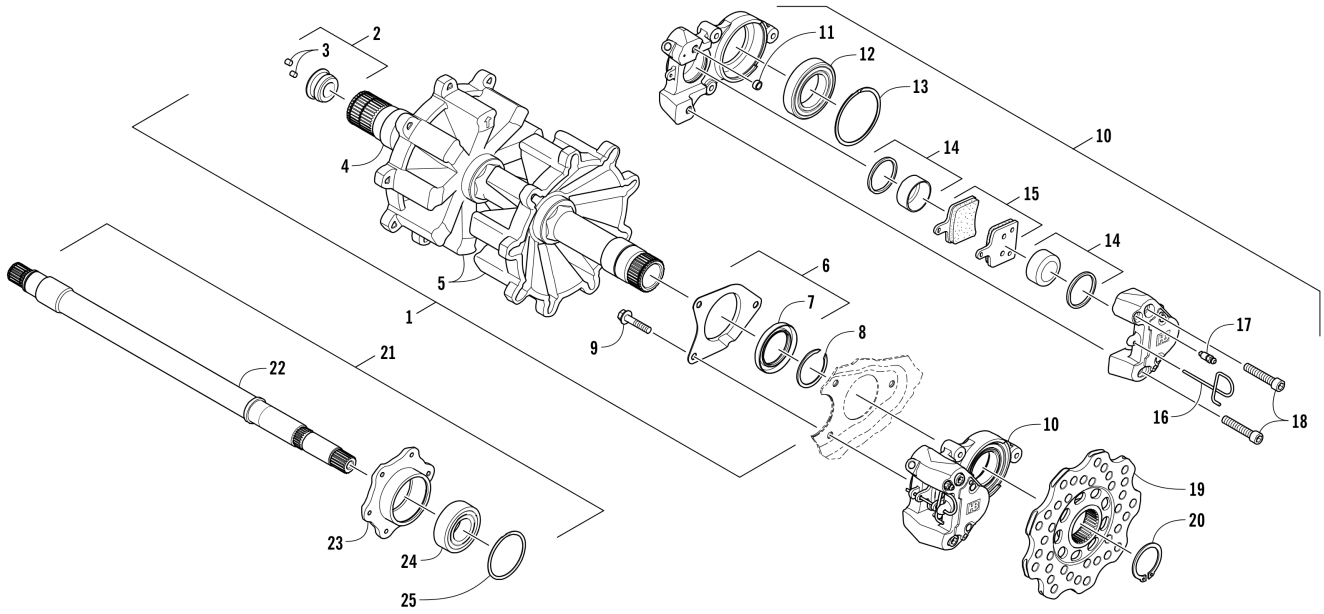

Item	Part No.	New Part	Qty	Name	Context	Footnote
1	0728-226		1	Track, Drive - Assembly	(inc. 2-8)	
2	1702-072		1	Plug, Magnetic - Assembly	(inc. 3)	
3	2602-211		2	Magnet		
4	2602-740		1	Driveshaft		
5	2602-617		2	Sprocket, Drive		
6	1702-206		1	Plate, Retaining - Seal	(inc. 7)	
7	1602-344		1	Seal		
8	2602-233		1	Ring, Retaining		
9	8408-831		3	Screw, Cap		
10	2602-486		1	Caliper, Brake - Assembly	(inc. 11-18)	
11	2602-411		1	Seal		
12	2602-198		1	Bearing		
13	2602-280		1	Ring, Retaining		
14	2602-410		2	Piston Set		
15	1702-245		1	Pad, Brake - Set	(inc. 16)	
16	2602-409		1	Pin, Retaining		
17	2602-408		1	Fitting, Bleed		
18	2602-412		2	Screw, Cap		
19	2602-720		1	Disc, Brake		
20	2602-629		1	Ring, Retaining		
21	1702-464	X	1	Shaft, Driven - Assembly	(inc. 22-25)	
22	3602-011	X	1	Shaft, Driven		
23	2602-422		1	Hub, Bearing		

Item	Part No.	New Part	Qty	Name	Context	Footnote
24	2602-247		1	Bearing		
25	2602-236		1	Ring, Retaining		

DRIVEN CLUTCH [104629]

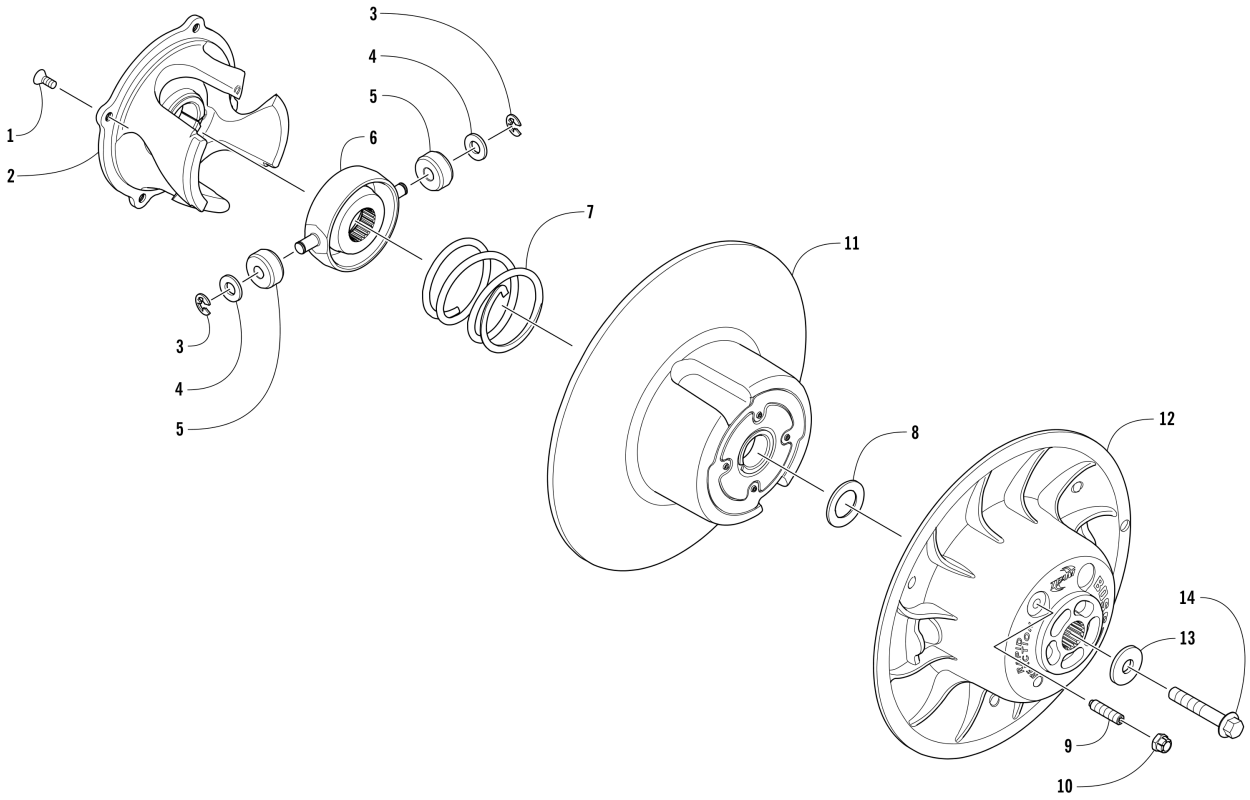

Item	Part No.	New Part	Qty	Name	Context	Footnote
-	0726-409		1	Clutch, Driven - Assembly		
1	0648-875		4	Screw, Machine		
2	0648-904		1	Cam, Driven		
3	0648-701		2	Ring, Retaining		
4	0648-700		2	Washer, Thrust		
5	0648-842		2	Roller		
6	0648-841		1	Spider		
7	0648-876		1	Spring, Driven Clutch		
8	0648-850		AR	Washer, Shim (.090 in.)		
8	0648-849		AR	Washer, Shim (.030 in.)		
8	0648-852		AR	Washer, Shim (.015 in.)		
9	0648-845		1	Screw, Set - Adjuster		
10	0648-846		1	Nut, Lock - Adjuster		
11	0748-776		1	Sheave, Moveable		
12	0748-030		1	Sheave, Stationary		
13	2623-120		1	Washer		
14	8409-060		1	Screw, Cap		

ELECTRICAL [101350]

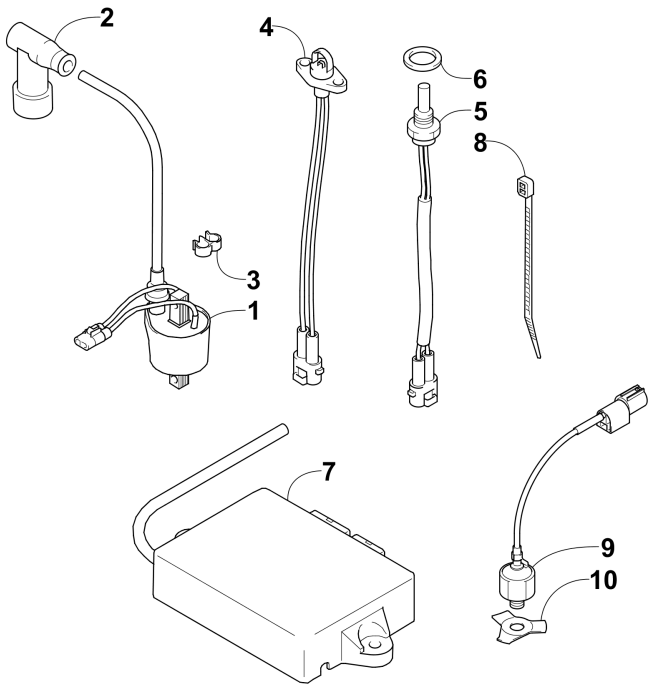

Item	Part No.	New Part	Qty	Name	Context	Footnote
1	3007-548		4	Coil, Ignition - Assembly		
2	3006-367		4	Cap, Spark Plug		
3	3005-387		2	Clip		
4	3006-728		1	Sensor, Air Temperature		
5	3006-725		1	Sensor, Coolant		
6	3005-233		1	Washer, Sensor		
7	0730-241		1	ECM - Circle		
7	0730-242		1	ECM - Square		
7	0730-243		1	ECM - Triangle		
8	3005-237		1	Cable Tie		
9	3006-886		1	Sensor, Knock - Assembly		
10	3007-549		1	Plate, Knock Sensor Lock		

ENGINE AND RELATED PARTS [103915]

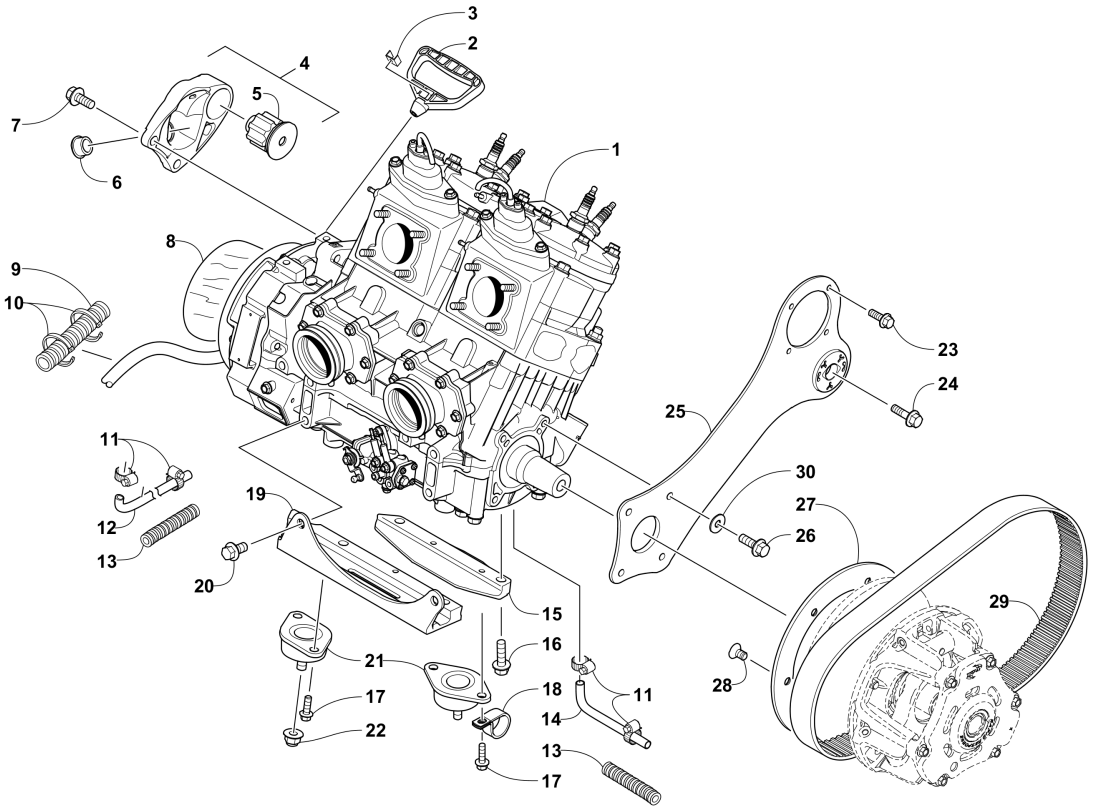

Item	Part No.	New Part	Qty	Name	Context	Footnote
1	0662-609		1	Engine, AB80L4 - w/o EFI Components		
2	0636-363		1	Handle, Recoil		
3	0606-885		1	Cap, Recoil Handle		
4	0708-582		1	Bracket, Engine Mounting - MAG	(inc. 5-6)	
5	0608-630		1	Mount, Engine		
6	0608-633		1	Bushing		
7	8409-026		2	Screw, Cap		
8	4606-425		1	Foil, Protective		
9	1619-131		1	Conduit, Flexible		
10	0123-788		AR	Tie, Cable - 8 in.		
11	0623-373		4	Clamp, Hose		
12	0610-923		1	Hose, Coolant - MAG/Throttle Body		
13	0619-776		AR	Conduit, Flexible - 5 ft		
14	0610-878		1	Hose, Coolant		
15	0708-602		1	Plate, Engine Mounting - Lower Rear		
16	8409-036		4	Screw, Cap		
17	1623-944		6	Screw, Shoulder		
18	1623-080		1	Clamp, Routing		
19	0708-600		1	Plate, Engine Mounting - Lower Front		
20	8409-021		2	Screw, Cap		
21	0708-658		3	Mount, Engine - Lower		
22	8427-002		2	Nut, Lock		
23	8408-621		4	Screw, Cap		

Item	Part No.	New Part	Qty	Name	Context	Footnote
24	8408-826		1	Screw, Cap		
25	0708-675		1	Plate, Engine Mounting - PTO		
26	8409-821		4	Screw, Cap		
27	0645-410		1	Ring, Damper		
28	1623-821		6	Screw, Machine		
29	0627-084		1	Belt, Drive		
30	8050-252		4	Washer		

EXHAUST ASSEMBLY [103916]

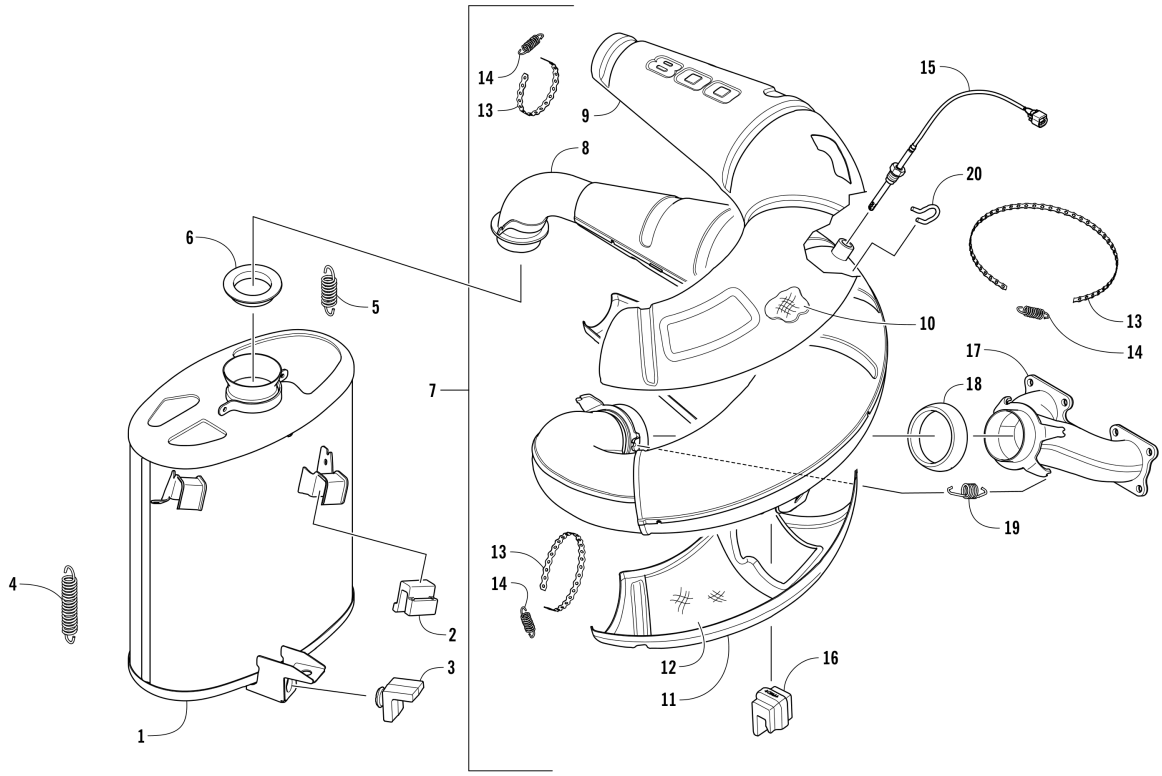

Item	Part No.	New Part	Qty	Name	Context	Footnote
1	2712-016	X	1	Resonator Assembly		
2	2612-893		2	Grommet, Rubber - Upper		
3	2612-706		1	Grommet, Resonator Mount		
4	2612-949		1	Spring, Exhaust		
5	0612-471		3	Spring, Extension		
6	1612-619		1	Gasket, Exhaust - Tailpipe		
7	2712-013	X	1	Chamber, Expansion - Assembly	(inc. 8-14)	
8	2712-012	X	1	Chamber, Expansion		
9	3612-035	X	1	Cover, Expansion Chamber - Upper		
10	3612-036	X	1	Packing, Expansion Chamber - Upper		
11	2612-984	X	1	Cover, Expansion Chamber - Lower		
12	2612-985	X	1	Packing, Expansion Chamber - Lower		
13	0624-552		AR	Tie, Perforated Band - 5 ft		
13	0624-541		AR	Tie, Perforated Band - 25 ft		
14	1612-178		4	Spring, Exhaust		
15	0630-330		1	Sensor, Exhaust Temp		
16	2612-667		1	Grommet, Expansion Chamber Mount		
17	1712-559		1	Manifold, Exhaust		
18	2612-059		1	Gasket, Exhaust - Manifold		
19	2612-399		4	Spring, Extension		
20	2612-124		1	Wire Form - Exhaust	Not a Service Part	

FRONT BUMPER AND FRAME ASSEMBLY [104619]

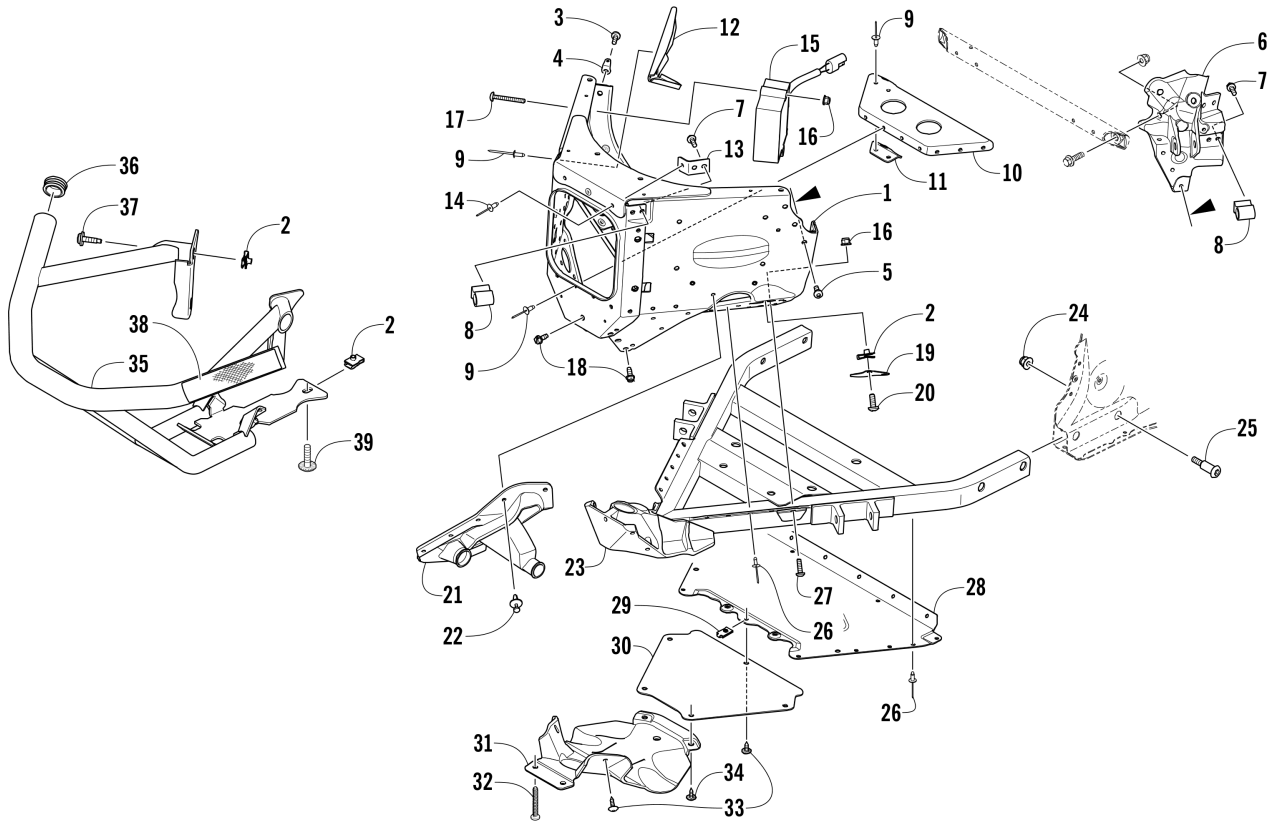

Item	Part No.	New Part	Qty	Name	Context	Footnote
1	2707-487		1	Panel, Front - Assembly - Black	(inc. 2-6)	
2	0423-577		8	Clip		
3	1623-683		1	Screw, Self-Tapping		
4	2612-707		1	Tab, Spring		
5	0423-538		10	Screw, Self-Tapping		
6	2707-304		1	Bracket, Shock Mount - Upper Right - Black		
6	2707-305		1	Bracket, Shock Mount - Upper Left - Black		
7	8413-617		8	Screw, Cap		
8	1607-233		4	Bracket, Mounting - Upper A-Arm		
9	8060-706		AR	Rivet		
10	1607-565		1	Bracket, Reinforcement		
11	1607-566		1	Brace, Steering Post		
12	0607-991		1	Bracket, Steering Stop		
13	1607-561		2	Gusset, A-Arm Mounting Bracket		
14	1623-241		2	Rivet		
15	0630-323		1	Regulator, Voltage		
16	8427-602		4	Nut, Lock		
17	8477-650		2	Screw, Machine		
18	1623-959		5	Screw, Self-Tapping		
19	1707-568		2	Panel, Close-Off		
20	8471-616		4	Screw, Machine		
21	1605-028		1	Boot, Steering - Right		
21	1605-029		1	Boot, Steering - Left		

Item	Part No.	New Part	Qty	Name	Context	Footnote
22	0623-362		16	Rivet, Reinstallable		
23	1707-864		1	Frame, Front - Lower - White		
24	8427-802		4	Nut, Lock		
25	1623-817		4	Screw, Shoulder		
26	8060-686		18	Rivet		
27	8468-620		2	Screw, Machine		
28	0607-983		1	Belly Pan - Center		
29	1623-052		1	Clip, U-Nut		
30	1607-063		1	Panel, Access		
31	6606-614		1	Belly Pan - Front		
32	1623-929		2	Screw, Self-Tapping		
33	2623-166		5	Screw, Self-Tapping		
34	2623-163	X	2	Screw, Self-Tapping		
35	2707-228		1	Bumper, Front - Orange		
36	2623-087		2	Plug		
37	0423-609		4	Screw, Machine		
38	2621-210		2	Decal, Reflector - Amber		
39	1623-031		1	Self-Tapping		

FRONT SHOCK ABSORBER ASSEMBLY [104062]

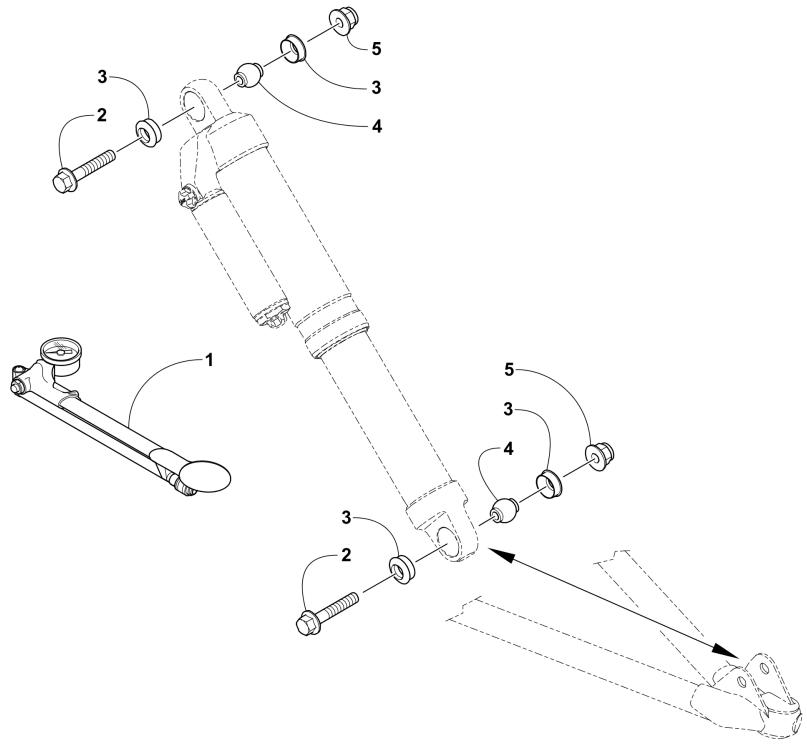

Item	Part No.	New Part	Qty	Name	Context	Footnote
1	0641-257		1	Pump, Shock		
2	8413-850		4	Screw, Cap		
3	3603-260		8	Bushing		
4	3603-261		4	Sleeve		
5	8437-804		4	Nut, Lock		

FRONT SUSPENSION SHOCK ABSORBER [102298]

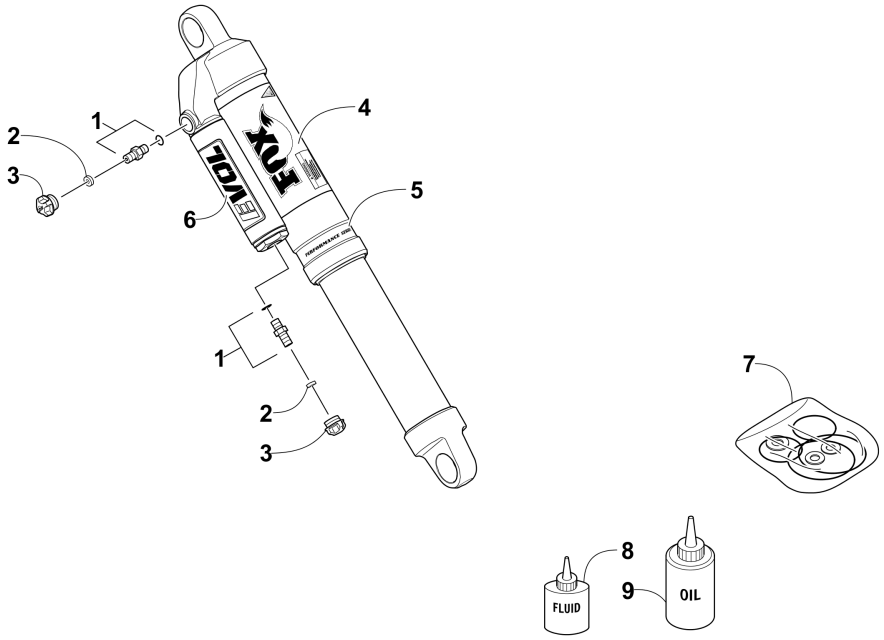

Item	Part No.	New Part	Qty	Name	Context	Footnote
-	3703-475		1	Shock, Ski		
1	2603-511		2	Valve, Air		
2	2603-965		2	Seal		
3	3603-367		2	Cap, Air Valve		
4	3603-369		1	Decal, Shock		
5	3603-365		1	Decal, "Performance Series"		
6	3603-373		1	Decal, "Evol"		
7	3603-525		1	Kit, Seal/Bearing Rebuild		
8	4639-012		AR	Fluid, Float Shock - 8 oz		
9	5639-530		AR	Oil, Shock - 1 qt		

FUEL PUMP ASSEMBLY [102910]

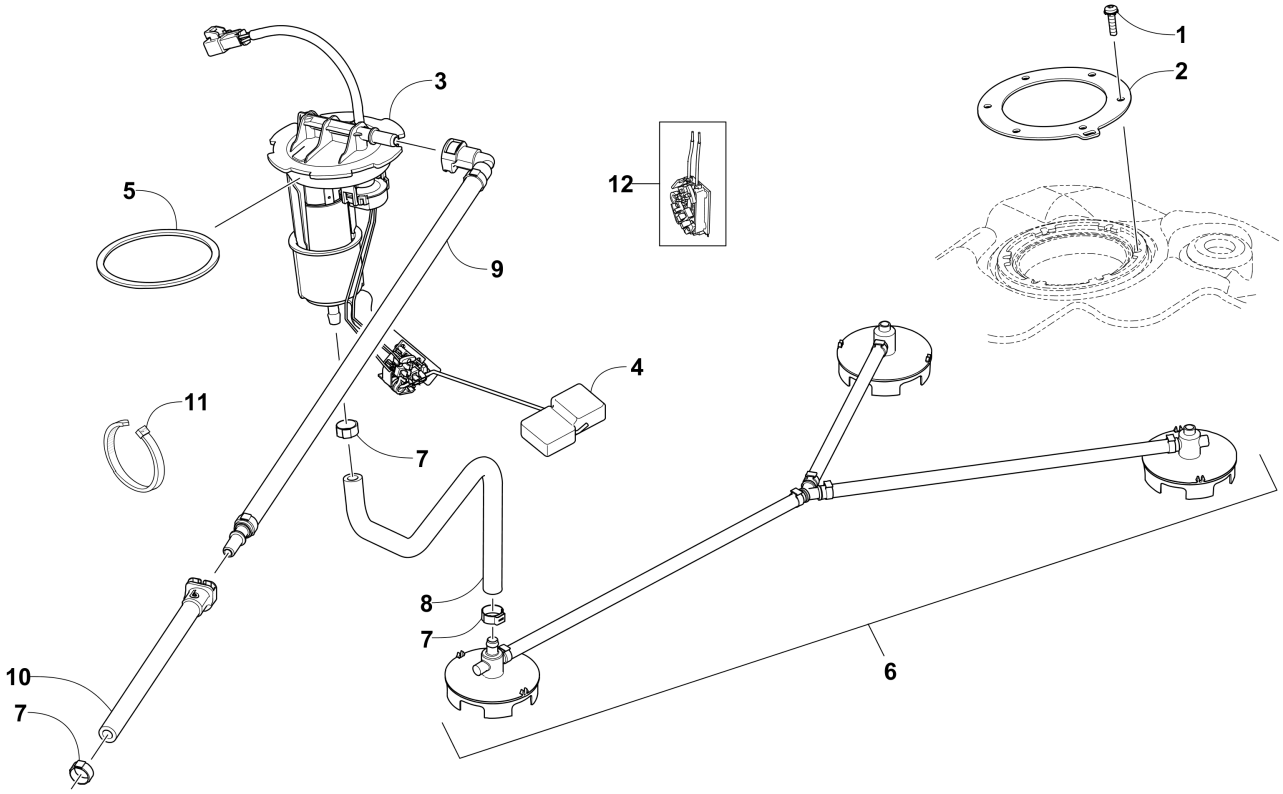

Item	Part No.	New Part	Qty	Name	Context	Footnote
1	0423-898		6	Screw, Self-Tapping		
2	2670-042		1	Plate, Retaining - Fuel Pump		
3	2670-472		1	Pump, Fuel - Assembly	(inc. 4)	
4	2670-235		1	Float		
5	0470-838		1	Seal		
6	2670-377		1	Pickup, Fuel - Assembly		
7	0610-563		3	Clamp, Hose		
8	2670-442		1	Hose, Fuel Pump/Pickup		
9	1770-146		1	Fuel Line Assembly		
10	1770-147		1	Fuel Line Assembly		
11	0123-788		AR	Tie, Cable - 8 in.		
11	0123-903		AR	Tie, Cable - 11.5 in.		
12	1770-170		1	Fuel Level Sensor Kit		

GAS TANK ASSEMBLY [102909]

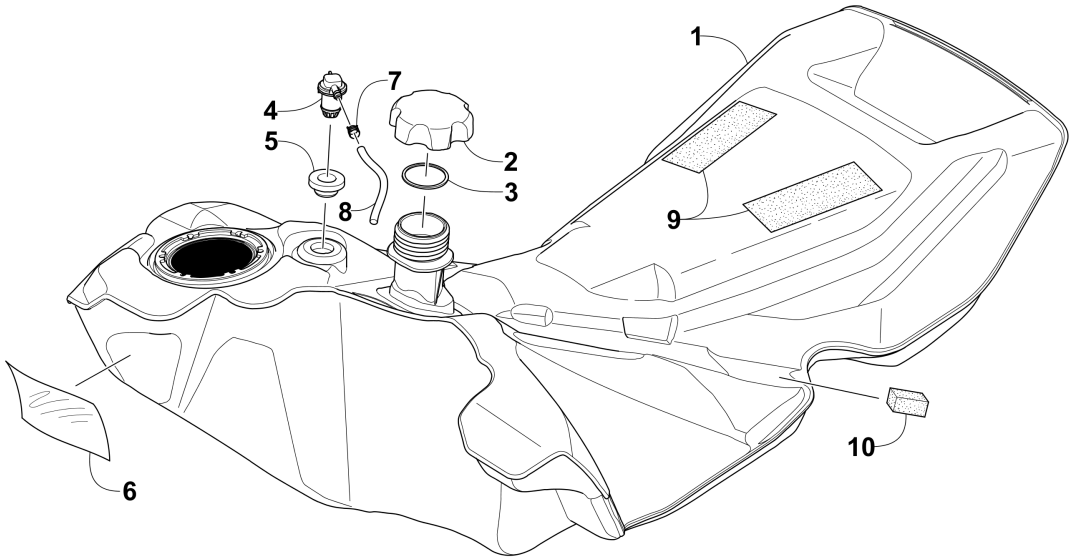

Item	Part No.	New Part	Qty	Name	Context	Footnote
1	1770-032		1	Tank, Gas - Assembly	(inc. 2-5)	
2	2670-153		1	Cap, Gas Tank - Assembly	(inc. 3)	
3	0109-733		1	Seal, Gas Tank Cap		
4	1670-787		1	Valve, Check		
5	1670-822		1	Grommet		
6	0619-206		AR	Foil, Protective -		
7	1623-233		1	Clamp, Hose		
8	6101-009		AR	Hose - 50 ft		
8	6101-001		AR	Hose - 100 ft		
9	6606-849		2	Velcro		
10	0617-667		2	Pad, Foam		

HANDLEBAR AND CONTROLS [103896]

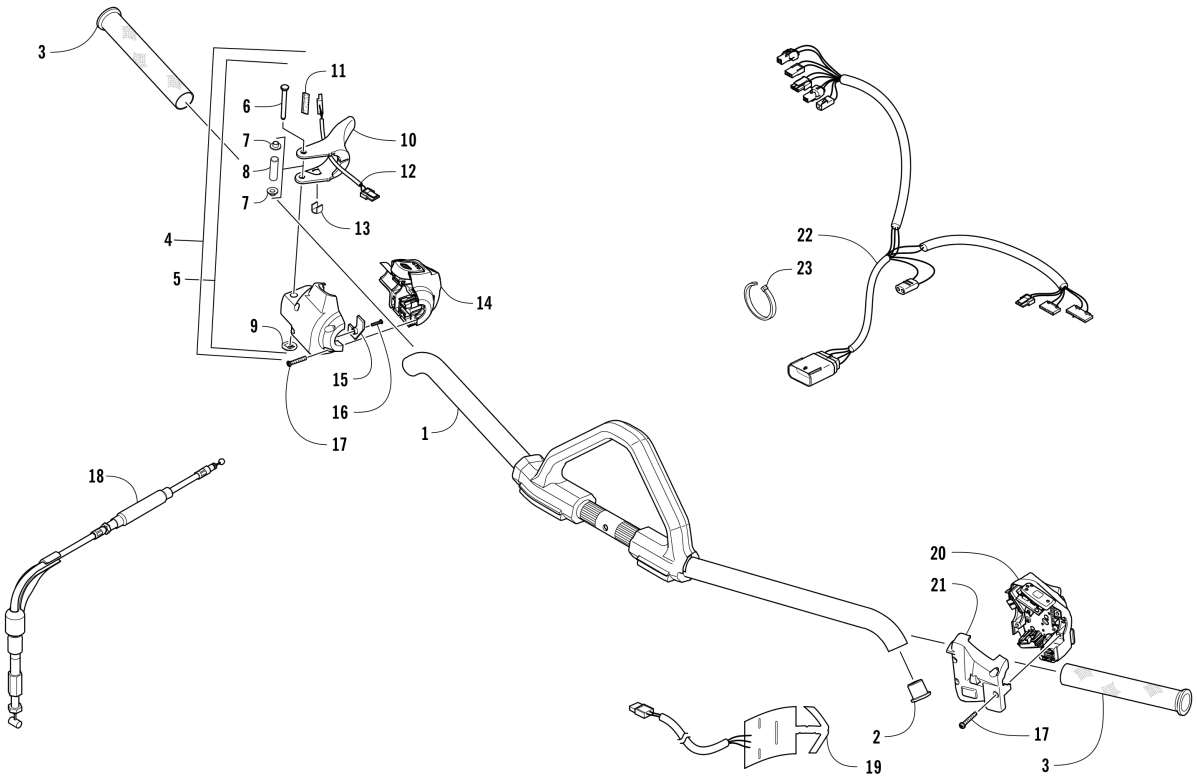

Item	Part No.	New Part	Qty	Name	Context	Footnote
1	1705-545	X	1	Handlebar		
2	2623-200	X	2	Plug		
3	1605-166		2	Grip, Handlebar		
4	0609-888		1	Control, Throttle - Rear	(inc. 5-10)	
5	0609-859		1	Kit, Throttle Lever Mounting	(inc. 6-9)	
6	0		1	Axle, Throttle Lever	Included in Kit	
7	0		2	Cap, Lever Axle	Included in Kit	
8	0		1	Spacer, Lever Axle	Included in Kit	
9	0123-766		1	Nut, Push		
10	0609-797		1	Lever, Throttle		
11	0617-248		1	Pad, Insulator		
12	0609-827		1	Element, Thumbwarmer		
13	0609-595		1	Clip, Retaining		
14	0609-880		1	Control, Throttle - Front		
15	0609-792		1	Cover, Connector		
16	0609-793		1	Screw, Machine		
17	0609-791		8	Screw, Self-Tapping		
18	0687-223		1	Cable, Throttle		
19	0609-948		1	Element, Handwarmer - Right		
19	0609-949		1	Element, Handwarmer - Left		
20	0609-929		1	Control, Dimmer - Front		
21	0609-883		1	Control, Dimmer - Rear		
22	1686-636		1	Harness, Handlebar		

Item	Part No.	New Part	Qty	Name	Context	Footnote
23	0123-811		AR	Tie, Cable - 4 in.		
23	0123-788		AR	Tie, Cable - 8 in.		

HEADLIGHT AND WIRING ASSEMBLIES [103967]

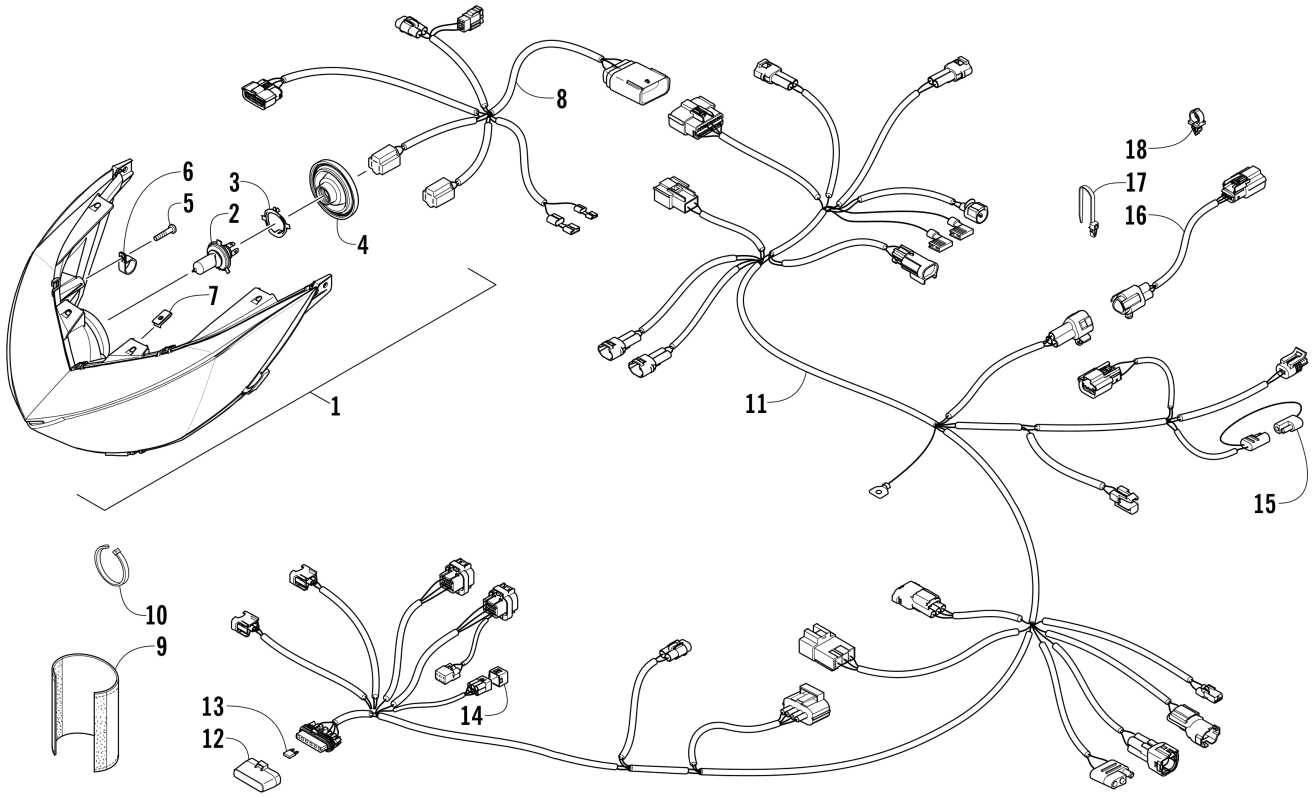

Item	Part No.	New Part	Qty	Name	Context	Footnote
1	0609-967	X	1	Headlight Assembly	(inc. 2-4)	
2	0609-956		2	Bulb		
3	0409-097		2	Retainer, Spring		
4	0609-919		2	Boot		
5	1623-915		4	Screw, Self-Tapping		
6	1623-675		1	Clamp		
7	0423-031		4	Clip, U-Nut		
8	1686-638		1	Harness, Hood		
9	5706-700		1	Wrap, Harness		
10	0123-811		AR	Tie, Cable - 4 in.		
10	0123-788		AR	Tie, Cable - 8 in.		
10	0123-903		AR	Tie, Cable - 11.5 in.		
11	1686-723		1	Harness, Main	(inc. 12-15)	
12	0609-889		1	Cover, Fuse Holder		
13	0430-068		1	Fuse - 7.5 Amp		
13	0430-031		1	Fuse - 15 Amp		
13	0430-098		1	Fuse, Mini - 20 Amp		
14	-		1	Cover, Diagnostics Connector	Not a Service Part	
15	0486-164		1	Tether, Accessory Connector		
16	1686-641		1	Harness, Extension - Taillight		
17	0623-677		AR	Tie, Cable - Push-Mount		
18	0623-101		AR	Clip, Routing - Snap-In		Optional

HOOD AND AIR INTAKE ASSEMBLY [104635]

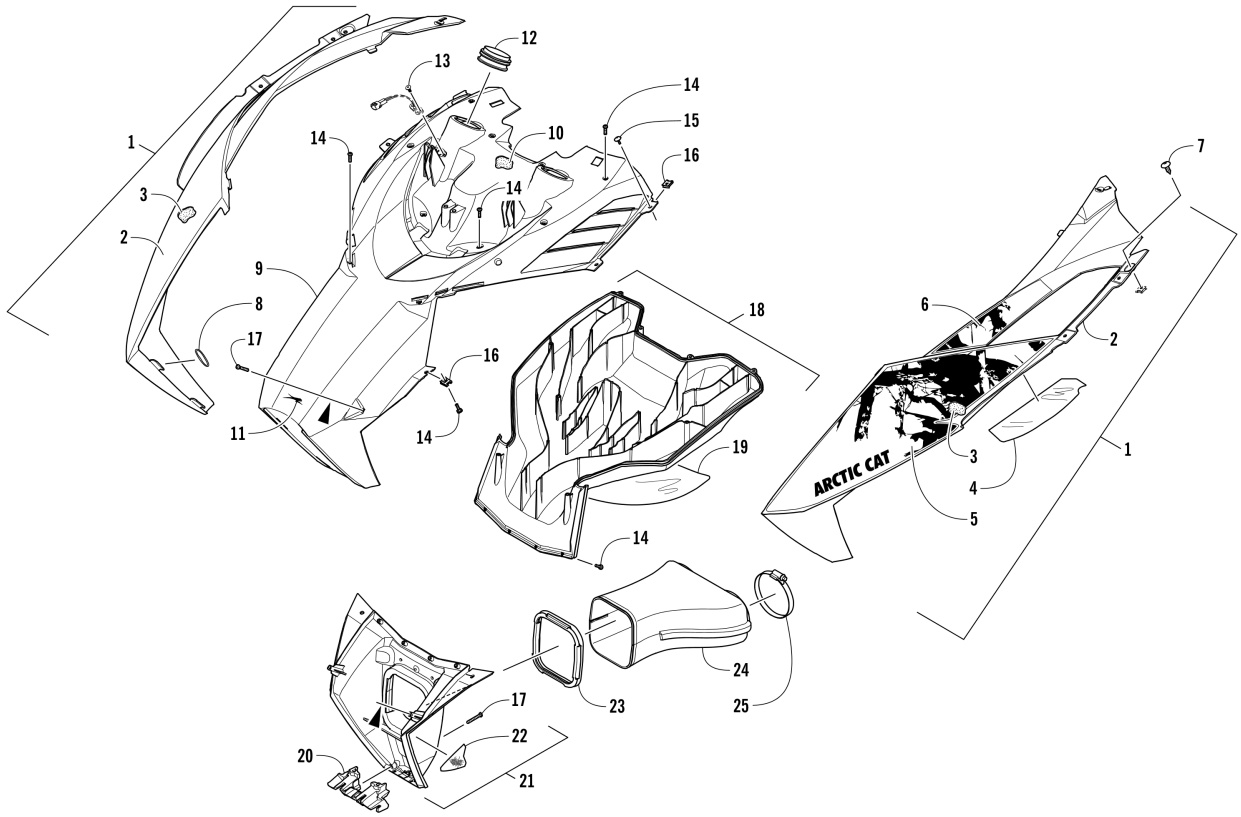

Item	Part No.	New Part	Qty	Name	Context	Footnote
1	5718-162		1	Hood w/Decals - Right - White	(inc. 2-3, 5 and 6)	
1	5718-163		1	Hood w/Decals - Left - White	(inc. 2-6)	
2	3718-612		1	Hood w/o Decals - Right - White	(inc. 3)	
2	3718-613		1	Hood w/o Decals - Left - White	(inc. 3-4)	
3	0617-646		1	Foam, Hood - Right		
3	0617-647		1	Foam, Hood - Left		
4	6606-407		1	Foil, Protective		
5	3621-400	X	1	Decal, Hood - Front Right		
5	3621-401	X	1	Decal, Hood - Front Left		
6	3621-546	X	1	Decal, Hood - Rear - Right		
6	3621-547	X	1	Decal, Hood - Rear - Left		
7	2623-163	X	2	Screw, Self-Tapping		
8	1623-960		4	O-Ring		
9	5706-356		1	Plenum, Intake - Upper	(inc. 10)	
10	0617-648		1	Foam, Intake		
11	4411-479		1	Decal, AirCat		
12	6606-386		2	Boot, Intake		
13	0623-165		2	Clip, Retaining		
14	1623-933		15	Screw, Self-Tapping		
15	0623-797		4	Screw, Self-Tapping		
16	1623-939		6	Clip, U-Nut		
17	1623-929		4	Screw, Self-Tapping		
18	6706-151		1	Plenum, Intake - Lower Rear	(inc. 19)	

Item	Part No.	New Part	Qty	Name	Context	Footnote
19	7606-307		1	Foil, Protective		
20	6606-822		1	Retainer, Plenum		
21	5706-990		1	Plenum, Air Intake - Lower Front - w/Reflector	(inc. 22)	
22	0621-989		2	Decal, Reflector - Amber		
23	0617-624		1	Adapter, Boot		
24	2670-328		1	Boot		
25	0423-018		2	Clamp, Hose		

HYDRAULIC BRAKE CONTROL ASSEMBLY [97987]

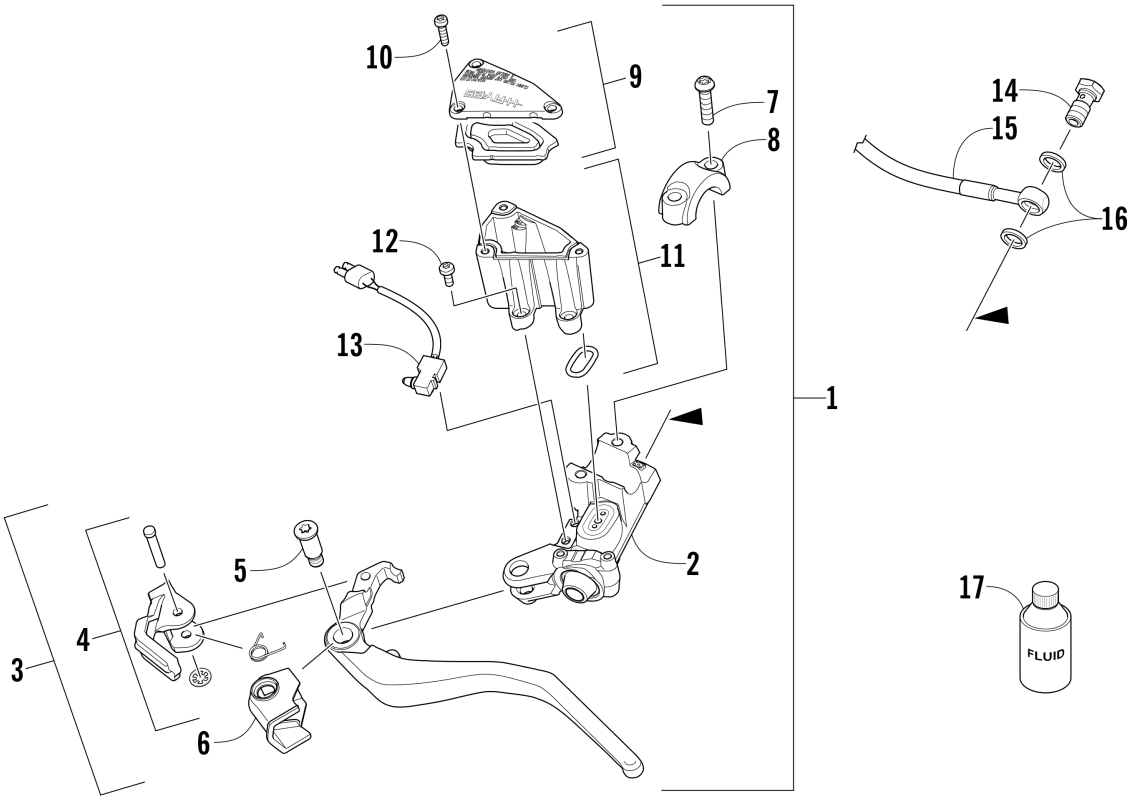

Item	Part No.	New Part	Qty	Name	Context	Footnote
1	2602-477		1	Brake Assembly	(inc. 2-13)	
2	2602-479		1	Piston Assembly		
3	2602-427		1	Lever, Brake - Assembly	(inc. 4-6)	
4	2602-428		1	Lock, Brake Lever - Kit		
5	2602-624		1	Screw, Shoulder		
6	2602-625		1	Boot		
7	1602-936		2	Screw, Machine		
8	0502-869		1	Clamp, Master Cylinder		
9	2602-429		1	Cover, Reservoir		
10	2602-430		3	Screw, Self-Tapping		
11	2602-433		1	Reservoir	(inc. 12)	
12	2602-519		3	Screw, Self-Tapping		
13	2602-432		1	Switch, Brake		
14	0423-413		2	Bolt, Banjo-Fitting		
15	2602-424		1	Brakeline, Hydraulic		
16	0423-178		4	Washer, Crush		
17	5639-848		AR	Fluid, Brake - 12 oz		

IDLER WHEEL ASSEMBLY [103900]

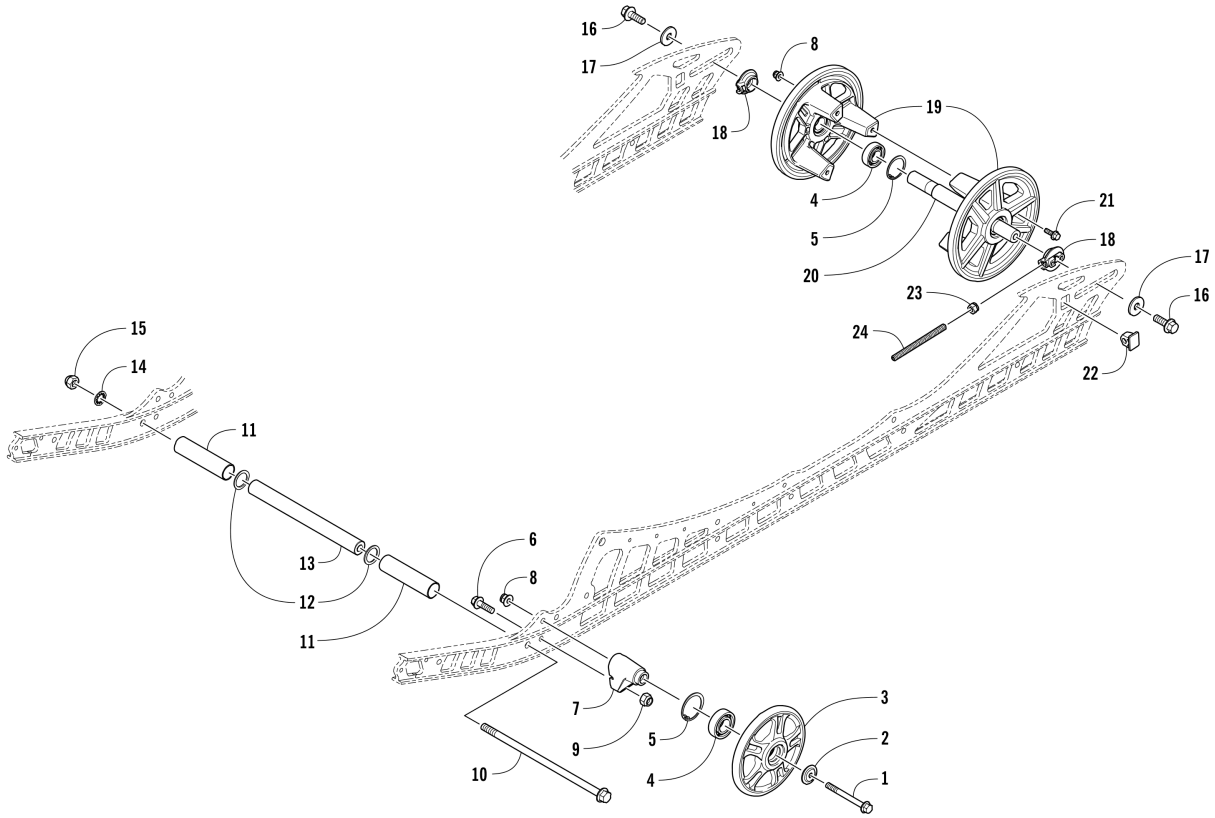

Item	Part No.	New Part	Qty	Name	Context	Footnote
1	8413-675		2	Screw, Cap		
2	2623-025		2	Washer		
3	3604-386		2	Wheel, Idler - Black	(inc. two No. 4-5)	
4	3604-033		4	Bearing		
5	0623-946		4	Ring, Retaining		
6	8413-620		2	Screw, Cap		
7	3604-899		2	Block, Mounting - Idler Wheel		
8	8427-602		5	Nut, Lock		
9	8422-602		2	Nut		
10	1423-064		1	Screw, Cap		
11	3604-083		2	Spacer		
12	0623-912		2	Washer		
13	3604-269		1	Axle		
14	1623-992		1	Washer, Internal Tooth Lock		
15	8422-002		1	Nut, Lock		
16	8408-031		2	Screw, Cap		
17	1623-931		2	Washer		
18	3604-641		2	Bushing, Adjuster		
19	4604-137		2	Wheel, Idler - Tri-Hub - 8.00 w/0.787 ID	(inc. two No. 4-5)	
20	3604-640		1	Axle, Rear		
21	8408-620		3	Screw, Cap		
22	3604-647		2	Adjuster, Track		
23	8422-802		2	Nut, Lock		

Item	Part No.	New Part	Qty	Name	Context	Footnote
24	2623-182	X	2	Screw, Cap		

MAGNETO [89829]

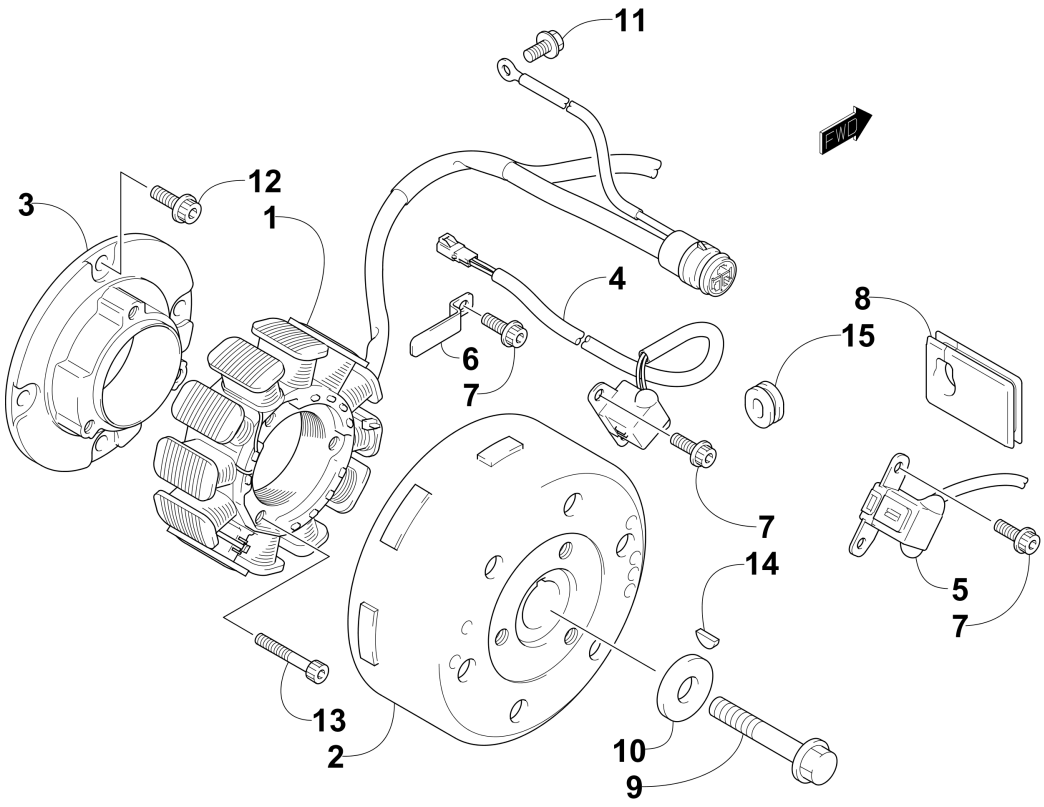

Item	Part No.	New Part	Qty	Name	Context	Footnote
1	3007-711		1	Stator Assembly		
2	3007-315		1	Rotor/Flywheel		
3	3007-546		1	Base, Stator - Plate		
4	3007-317		1	Sensor, Ignition Timing		
5	3007-318		1	Sensor, Ignition Timing		
6	3005-960		1	Retainer, Wire		
7	3007-433		5	Bolt		
8	3005-775		1	Grommet		
9	3006-476		1	Bolt		
10	3005-987		1	Washer		
11	3007-371		1	Bolt		
12	3007-449		4	Bolt		
13	3007-450		3	Bolt		
14	3004-540		1	Key, Woodruff		
15	3007-547		1	Grommet		

OIL PUMP [93329]

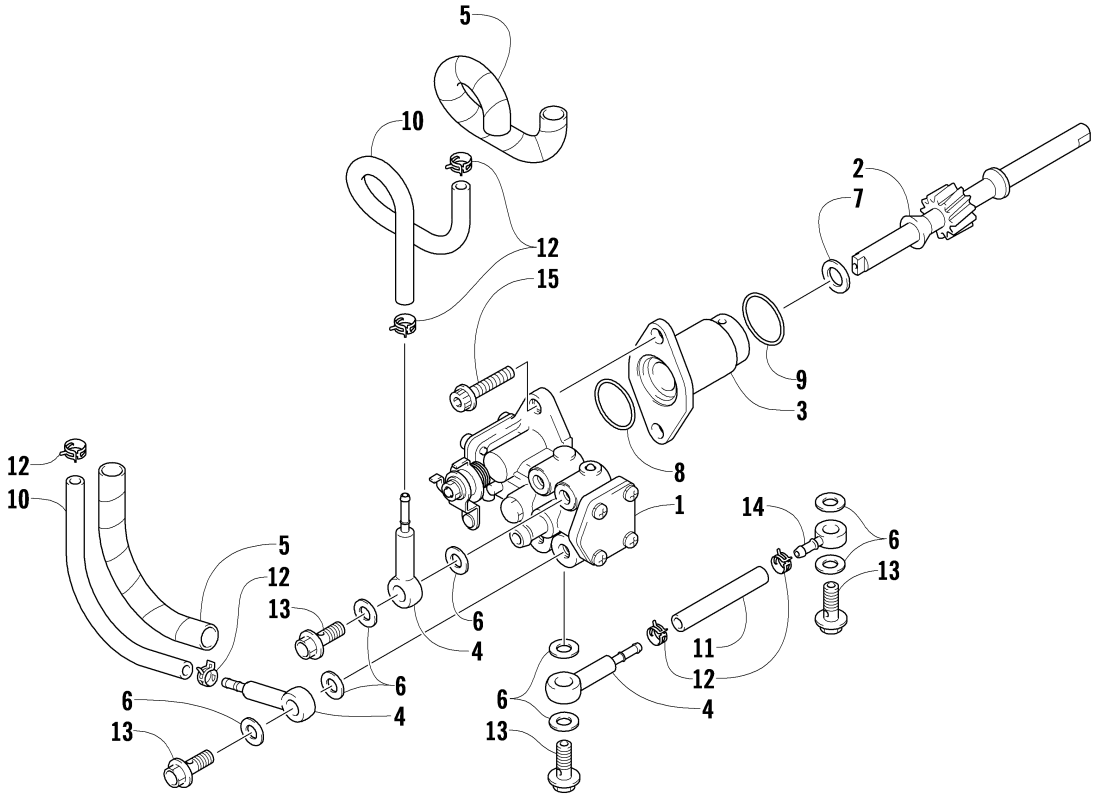

Item	Part No.	New Part	Qty	Name	Context	Footnote
1	3007-894		1	Pump, Oil		
2	3007-895		1	Gear, Driven		
3	3007-916		1	Retainer, Oil Pump Input Shaft		
4	3003-217		3	Check Valve		
5	3005-032		2	Protector		
6	3402-009		8	Washer, Driven		
7	3423-300		1	Shim		
8	3008-030		1	O-Ring		
9	3005-126		1	O-Ring		
10	3008-035		2	Hose		
11	3005-357		1	Hose		
12	3008-037		6	Clamp, Hose		
13	3004-346		4	Bolt, Union		
14	3003-661		1	Union, Gear Lube		
15	3007-445		2	Screw, Cap		

OIL TANK ASSEMBLY [100501]

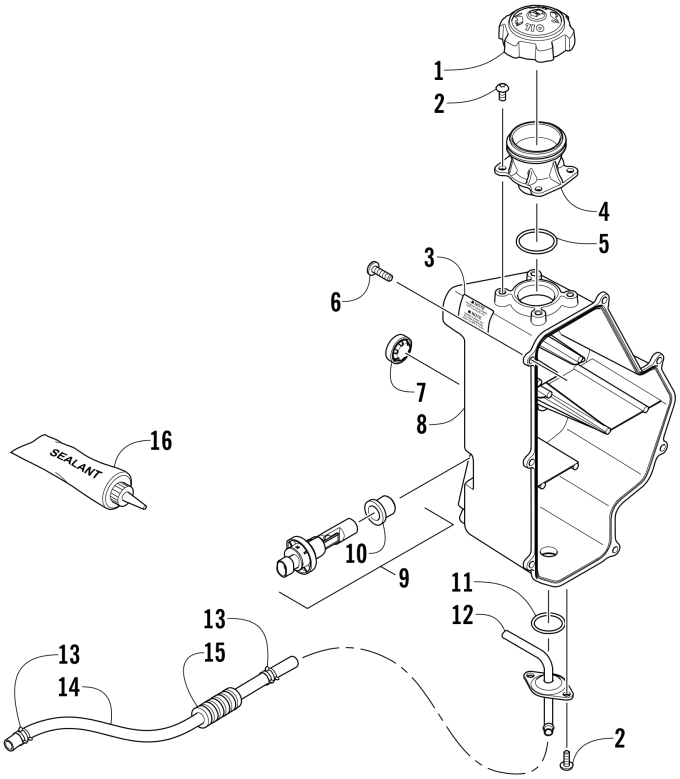

Item	Part No.	New Part	Qty	Name	Context	Footnote
1	2670-447		1	Cap, Oil Tank		
2	1623-969		6	Screw, Self-Tapping		
3	4611-532		1	Decal, Oil Tank		
4	2670-329		1	Neck, Oil Fill		
5	2623-158		1	O-Ring		
6	1623-814		7	Screw, Machine		
7	2670-257		1	Glass, Sight		
8	1770-019		1	Tank, Oil		
9	0609-915		1	Switch, Level - Oil	(inc. 10)	
10	0609-924		1	Grommet		
11	0648-441		1	O-Ring		
12	2670-229		1	Fitting, Outlet		
13	1623-042		2	Clamp, 10mm		
14	0610-692		AR	Hose - Green - 25 ft		
14	0610-693		AR	Hose - Green - 100 ft		
15	1619-345		AR	Conduit, Flexible - 3 ft		
16	1048-063		AR	Sealant - 70 ml		

PISTON AND CRANKSHAFT [91586]

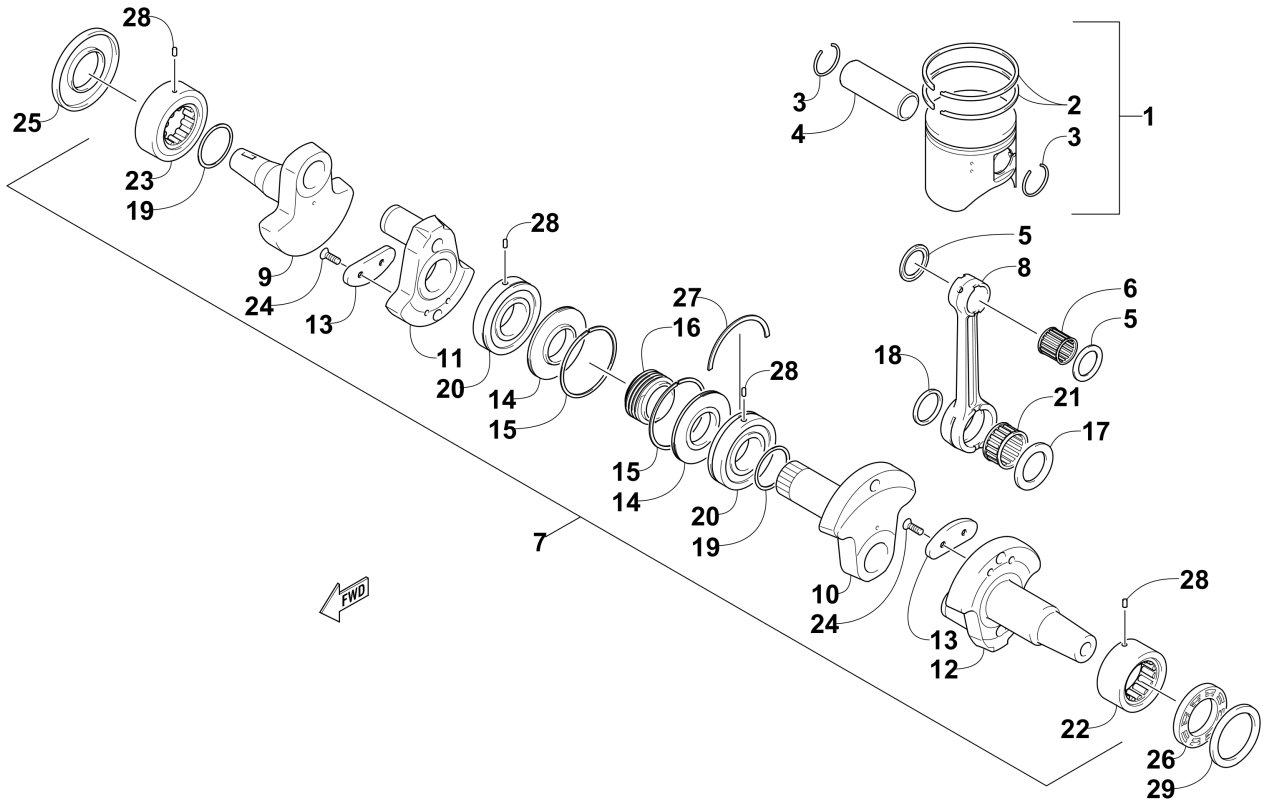

Item	Part No.	New Part	Qty	Name	Context	Footnote
1	3007-877		2	Piston Set	(inc. 2-3)	
2	3006-394		2	Ring Set, Piston		
3	3005-304		4	Circlip, Piston		
4	3007-878		2	Pin, Piston		
5	3008-500		4	Washer		
6	3008-503		2	Bearing		
7	3007-879		1	Crankshaft Assembly	(inc. 8-24)	
8	3007-880		2	Connecting Rod		
9	3007-881		1	Crankshaft - Right		
10	3007-882		1	Crankshaft - Middle		
11	3007-883		1	Wheel, Crankshaft		
12	3007-884		1	Crankshaft - Left		
13	3007-667		2	Balancer, Crankshaft		
14	3006-508		2	Race, Middle Crank Seal		
15	3005-508		2	Ring, Middle Crank Seal		
16	3007-885		1	Gear, Oil Pump Drive		
17	3004-147		2	Washer		
18	3006-489		2	Shim - 30 x 38 x 1		
19	3008-495		2	Washer		
20	3008-421		2	Bearing		
21	3007-532		2	Bearing, Crank Pin		
22	3007-439		1	Bearing - Left		
23	3006-551		1	Bearing - Right		

Item	Part No.	New Part	Qty	Name	Context	Footnote
24	3007-440		4	Screw		
25	3007-533		1	Seal, Oil		
26	3003-759		1	Seal, Oil - Left		
27	3003-359		1	C-Ring		
28	3003-658		4	Pin, Alignment		
29	3006-552		1	Spacer		

REAR SUSPENSION FRONT ARM ASSEMBLY [104150]

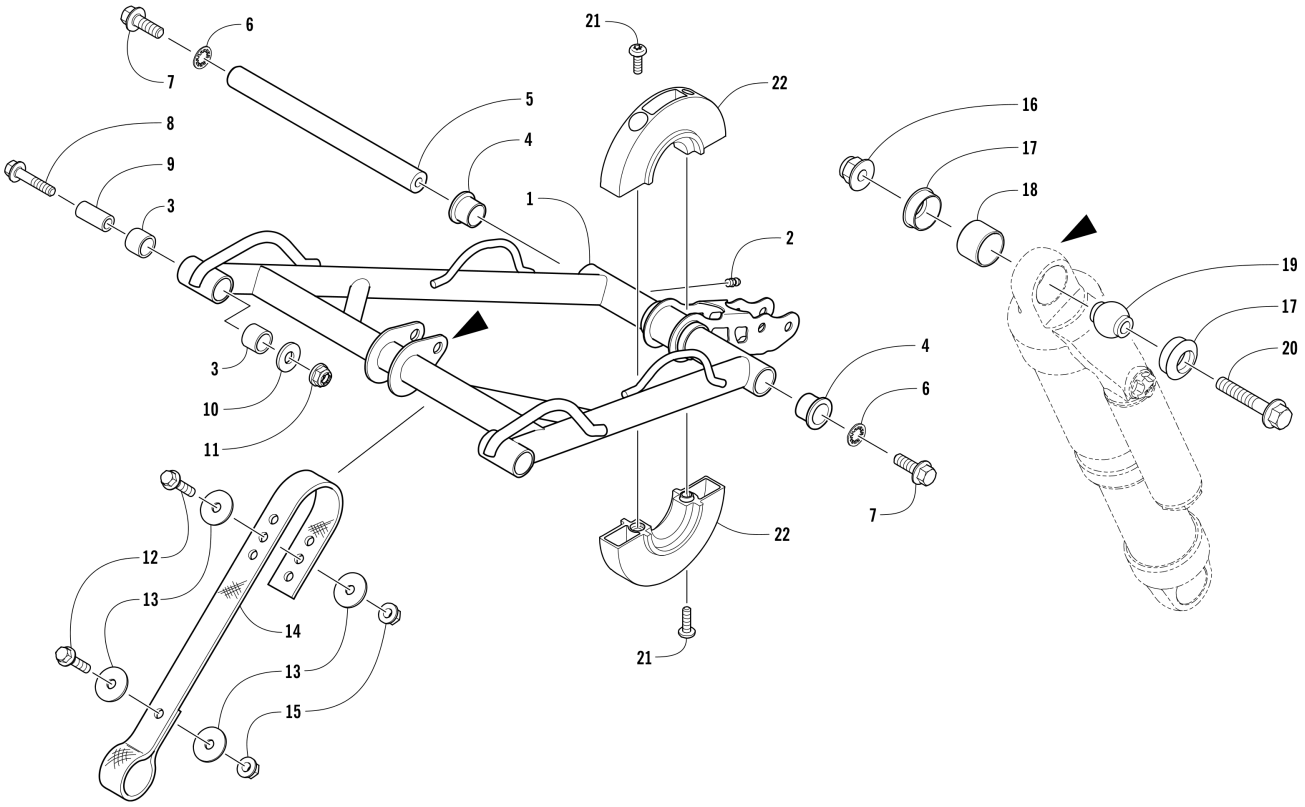

Item	Part No.	New Part	Qty	Name	Context	Footnote
1	3704-122	X	1	Arm, Front Suspension - Black	(inc. 2-4)	
2	1623-010		1	Fitting, Grease		
3	0604-889		4	Bushing		
4	3604-028		2	Bushing, Flared		
5	3604-853		1	Axle		
6	1623-992		2	Washer, Internal Tooth Lock		
7	8413-031		2	Screw, Cap		
8	8408-065		2	Screw, Cap		
9	3604-665		2	Axle		
10	8450-163		2	Washer		
11	8427-002		2	Nut, Lock		
12	8408-630		4	Screw, Cap		
13	8450-109		8	Washer		
14	3604-391		2	Strap, Limiter		
15	8427-602		4	Nut, Lock		
16	8437-804		1	Nut, Lock		
17	3603-260		2	Bushing		
18	3604-906		1	Bushing		
19	3603-261		1	Sleeve		
20	8413-845		1	Screw, Cap		
21	1623-251		2	Screw, Self-Tapping		
22	4604-201	X	2	Wheel, Track Guide		

REAR SUSPENSION FRONT ARM SHOCK ABSORBER [103902]

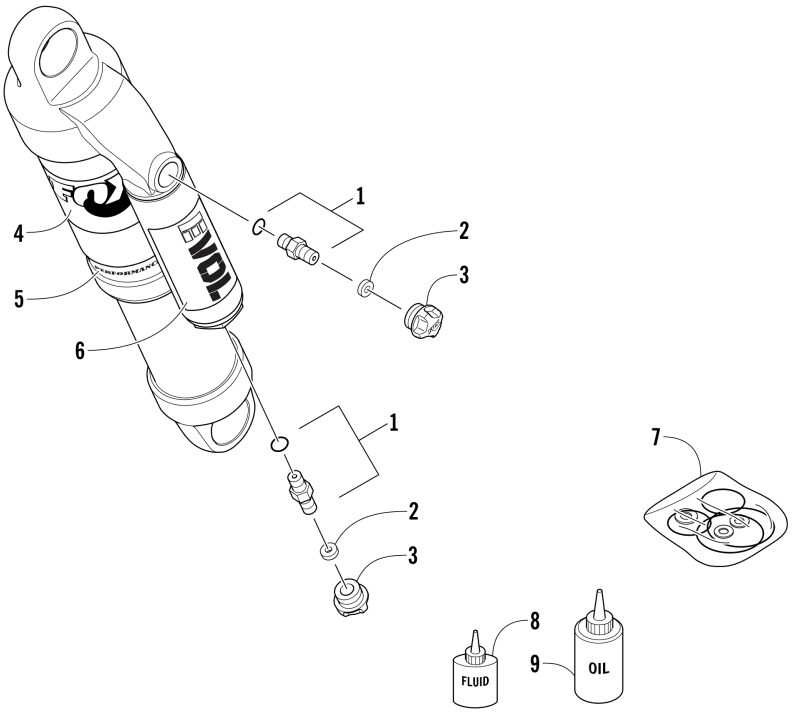

Item	Part No.	New Part	Qty	Name	Context	Footnote
-	3704-130	X	1	Complete Shock Absorber		
1	2603-511		2	Valve, Air		
2	2603-965		2	Seal		
3	3603-367		2	Cap, Air Valve		
4	3603-521		1	Decal, Reservoir		
5	3603-365		1	Decal, "Performance Series"		
6	3603-373		1	Decal, "Evol"		
7	3603-525		1	Kit, Seal/Bearing Rebuild		
8	4639-012		AR	Fluid, Float Shock - 8 oz		
9	5639-530		AR	Oil, Shock - 1 qt		

REAR SUSPENSION REAR ARM ASSEMBLY [104180]

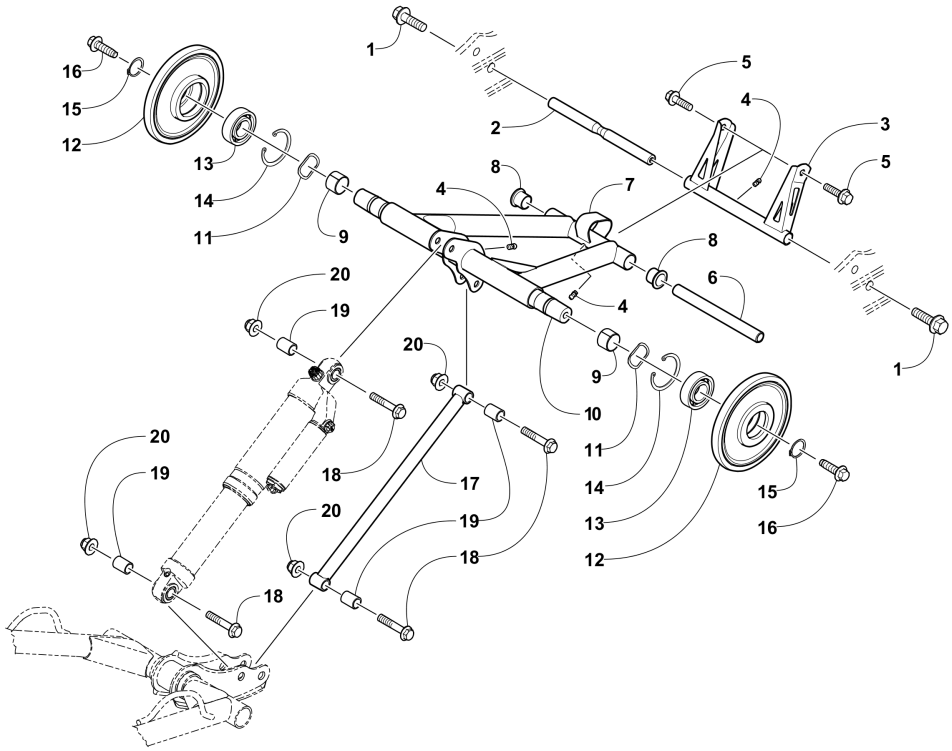

Item	Part No.	New Part	Qty	Name	Context	Footnote
1	8408-826		2	Screw, Cap		
2	3604-857		1	Axle		
3	3704-014	X	1	Arm, Rear	(inc. one No. 4)	
4	1623-010		3	Fitting, Grease		
5	8413-831		2	Screw, Cap		
6	3604-855		1	Axle		
7	3704-124	X	1	Arm, Idler	(inc. two No. 4 and 8-9)	
8	3604-028		2	Bushing, Flared		
9	2604-852		2	Bearing		
10	3604-854		1	Axle, Inner Carriage		
11	1623-692		2	Washer, Wave		
12	2604-699		2	Wheel, Idler	(inc. 13-14)	
13	0107-598		2	Bearing		
14	0123-798		2	Ring, Retaining		
15	1623-690		2	Ring, Retaining		
16	2623-002		2	Screw, Cap		
17	2704-790		1	Link, Rear Shock - Black		
18	8413-845		4	Screw, Cap		
19	3604-846		4	Sleeve		
20	8437-804		4	Nut, Lock		

REAR SUSPENSION REAR ARM SHOCK ABSORBER [103904]

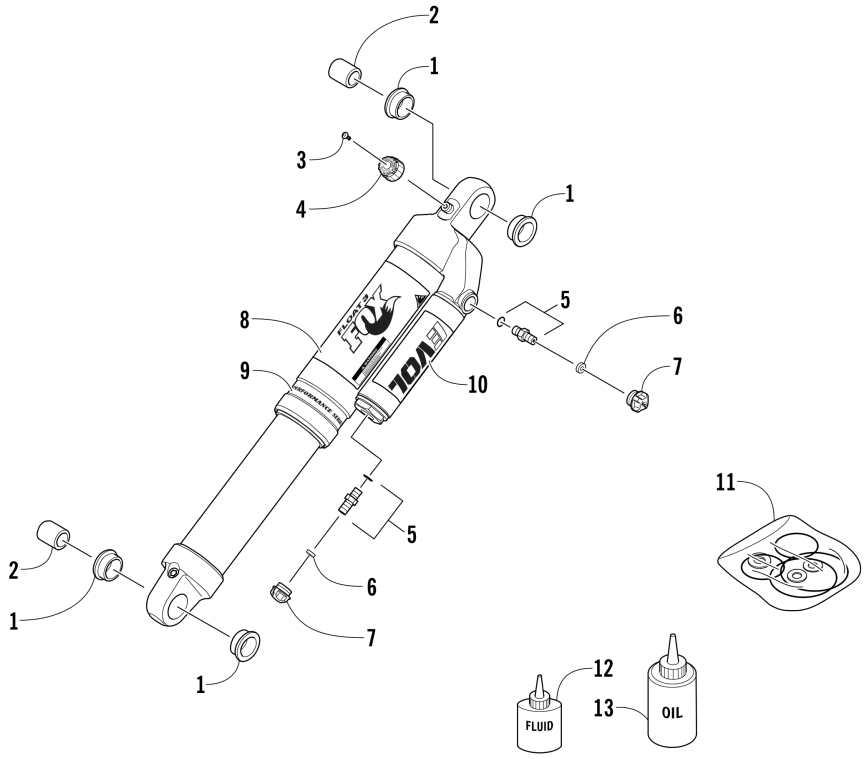

Item	Part No.	New Part	Qty	Name	Context	Footnote
-	3704-131	X	1	Complete Shock Absorber		
1	1604-222		4	Bushing		
2	2604-223		2	Sleeve		
3	3603-377		1	Screw, Machine		
4	3603-386		1	Knob, Damping Adjuster - Rebound		
5	2603-511		2	Valve, Air		
6	2603-965		2	Seal		
7	3603-367		2	Cap, Air Valve		
8	3603-369		1	Decal, Shock		
9	3603-365		1	Decal, "Performance Series"		
10	3603-373		1	Decal, "Evol"		
11	4604-066		1	Kit, Seal/Bearing Rebuild		
12	4639-012		AR	Fluid, Float Shock - 8 oz		
13	5639-530		AR	Oil, Shock - 1 qt		

RECOIL STARTER [89828]

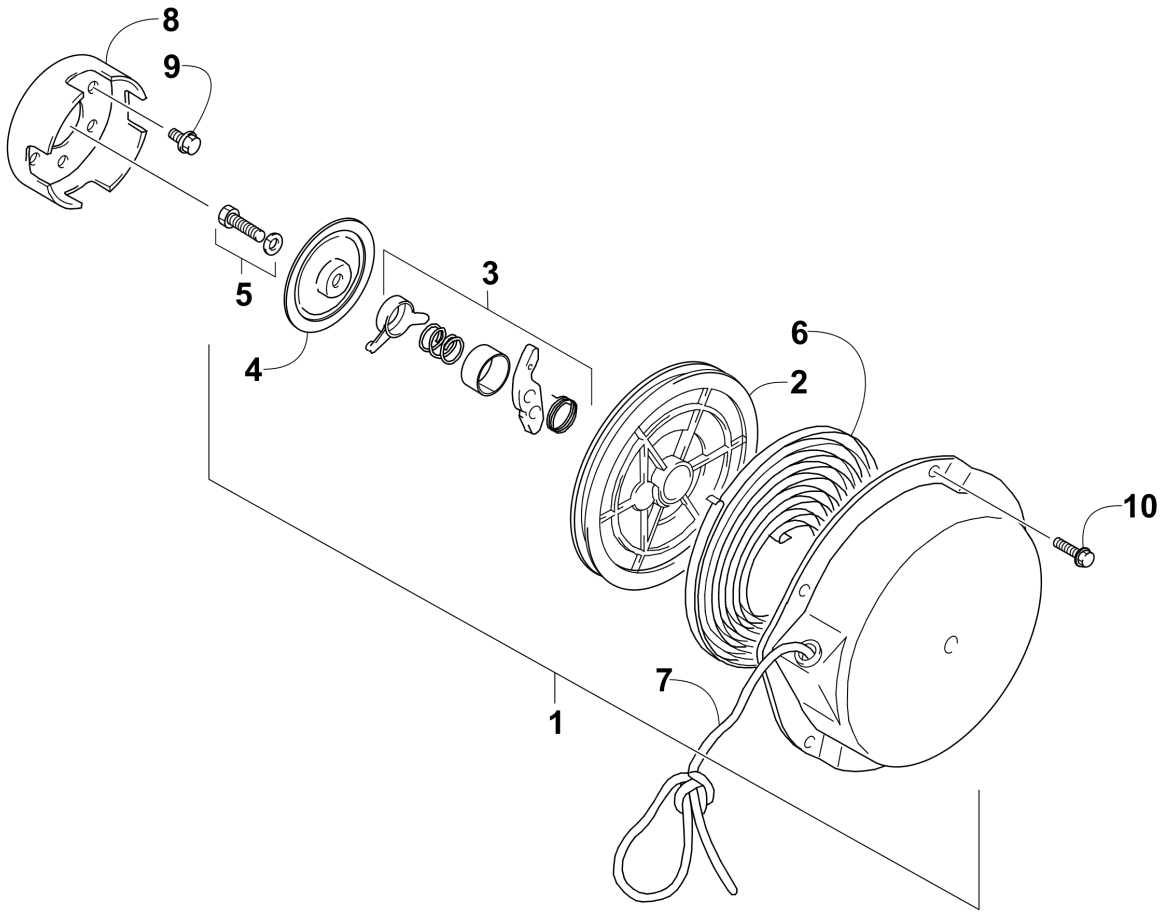

Item	Part No.	New Part	Qty	Name	Context	Footnote
1	3007-307		1	Starter Assembly	(inc. 2-7)	
2	3007-308		1	Roller, Starter		
3	3007-309		1	Ratchet Set		
4	3007-310		1	Plate, Friction		
5	3007-311		1	Bolt w/Washer		
6	3007-312		1	Spring		
7	3006-889		1	Rope, Starter (6 mm Dia.) (203 cm)		
8	3007-544		1	Pulley, Starter		
9	3007-407		3	Bolt		
10	3006-529		5	Bolt		

REED VALVE ASSEMBLY [96875]

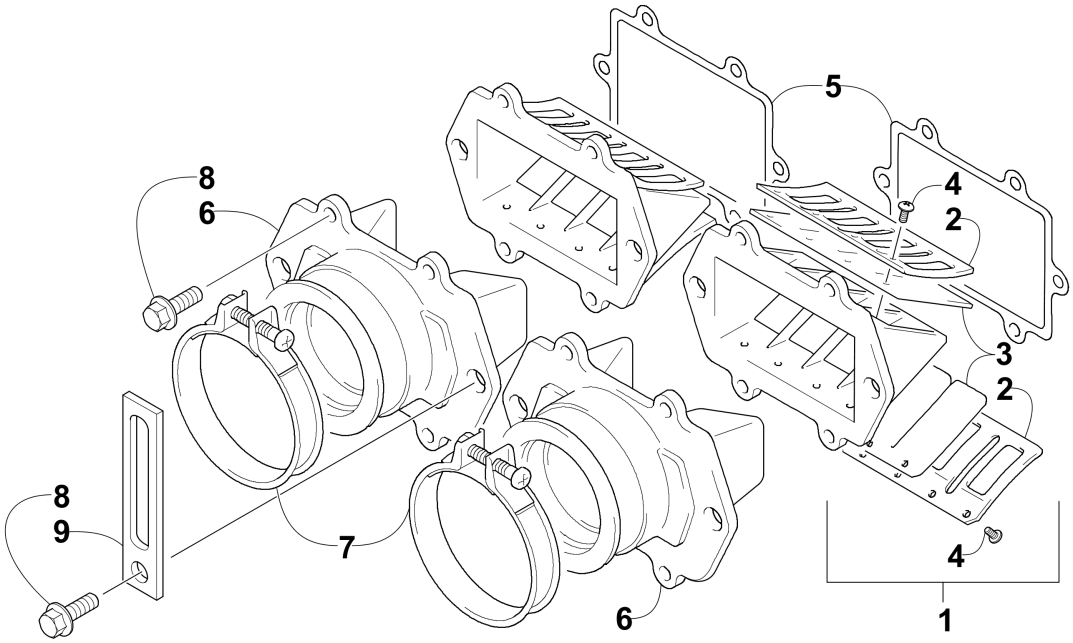

Item	Part No.	New Part	Qty	Name	Context	Footnote
1	3007-886		2	Valve, Reed - Assembly	(inc. 2-4)	
2	3007-887		4	Stopper		
3	3007-888		4	Valve, Reed		
4	3004-506		16	Screw, Machine		
5	3005-879		2	Gasket, Reed Valve		
6	3006-527		2	Pipe, Intake		
7	3402-455		2	Clamp		
8	3007-380		12	Bolt		
9	1623-984		1	Clamp, Routing		Optional

SEAT ASSEMBLY [104626]

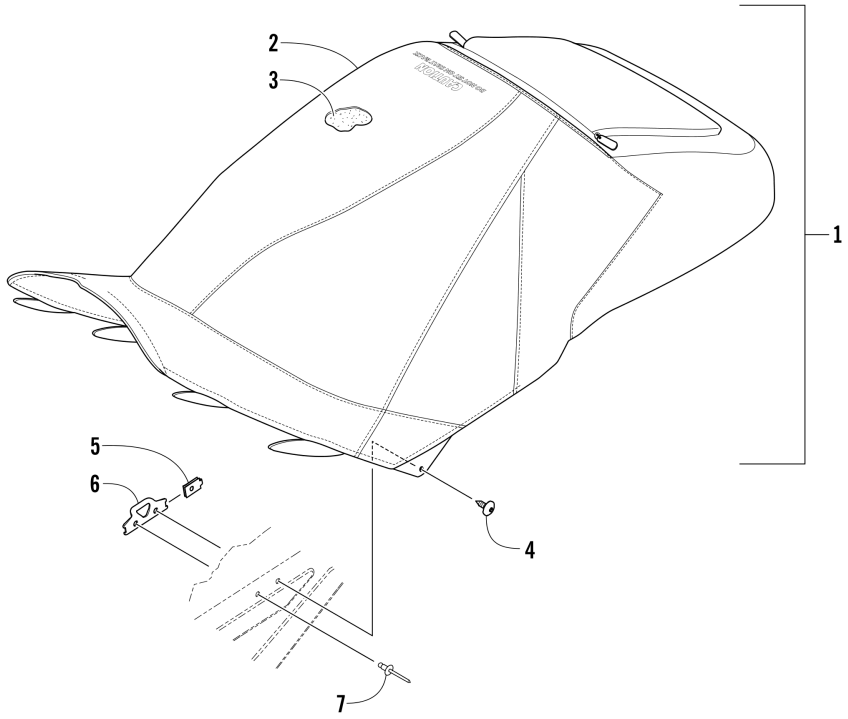

Item	Part No.	New Part	Qty	Name	Context	Footnote
1	6706-196		1	Complete Seat Assembly - Camo	(inc. 2-3)	
2	6706-195	X	1	Cover, Seat - Camo		
3	0717-213		1	Foam, Seat		
4	2623-166		2	Screw, Self-Tapping		
5	1623-052		2	Clip, U-Nut		
6	6606-704		2	Plate, Retaining		
7	8060-682		6	Rivet		

SERVOMOTOR ASSEMBLY [91541]

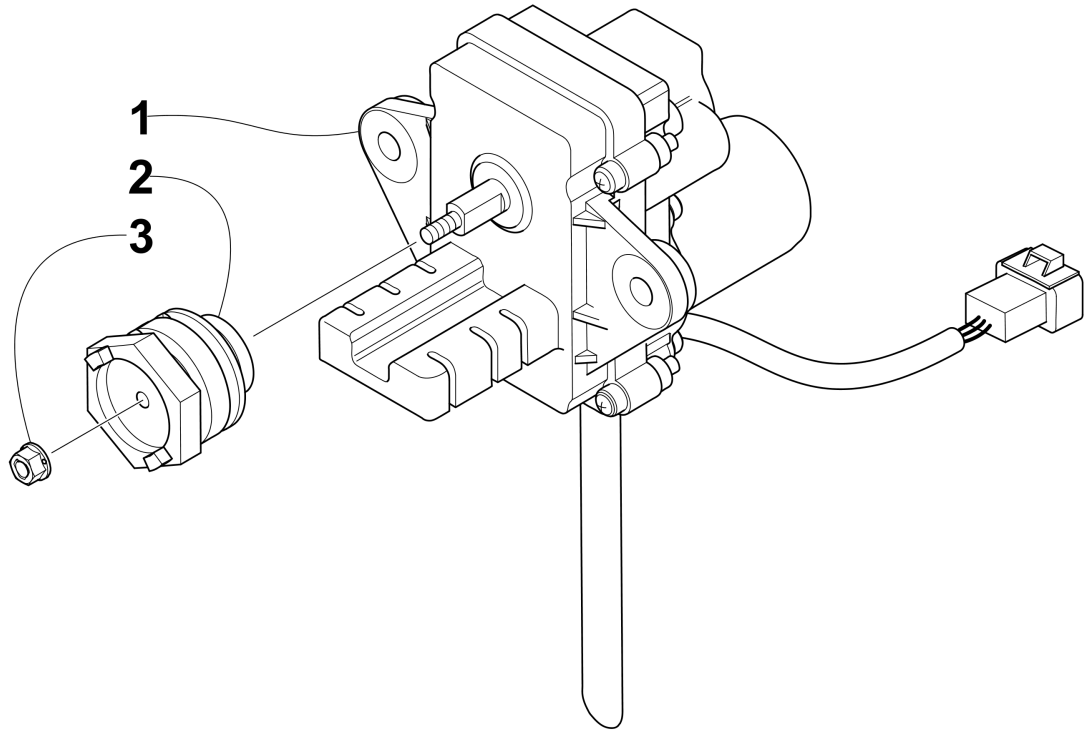

Item	Part No.	New Part	Qty	Name	Context	Footnote
1	3007-702		1	Motor, Exhaust Valve - Assembly		
2	3005-661		1	Pulley, Controller		
3	3007-550		1	Nut		

SKI AND SPINDLE ASSEMBLY [104630]

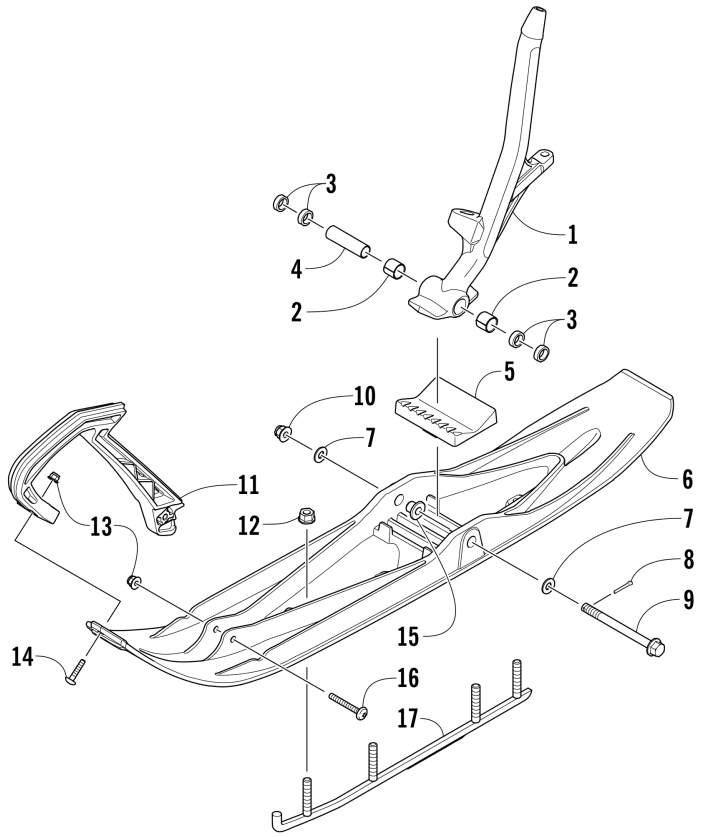

Item	Part No.	New Part	Qty	Name	Context	Footnote
1	3703-430		1	Spindle, Steering - Right - Orange	(inc. two No. 2)	
1	3703-431		1	Spindle, Steering - Left - Orange	(inc. two No. 2)	
2	0603-158		4	Bearing		
3	3603-321		2	Axle, Spindle		
4	2603-208		8	Spacer		
5	3603-305		2	Damper, Ski		
6	3603-518		2	Ski, Plastic - Black		
7	1623-801		4	Washer		
8	0123-458		2	Pin, Cotter		
9	2623-030		2	Screw, Cap		
10	0423-744		2	Nut, Lock		
11	2603-952		2	Handle, Plastic - Orange		
12	8047-486		8	Nut, Lock		
13	8427-602		4	Nut, Lock		
14	8476-625		2	Screw, Machine		
15	2603-746		4	Insert		
16	8476-650		2	Screw, Machine		
17	0703-871		2	Wearbar		

SKID PLATE AND SIDE PANEL ASSEMBLY [104525]

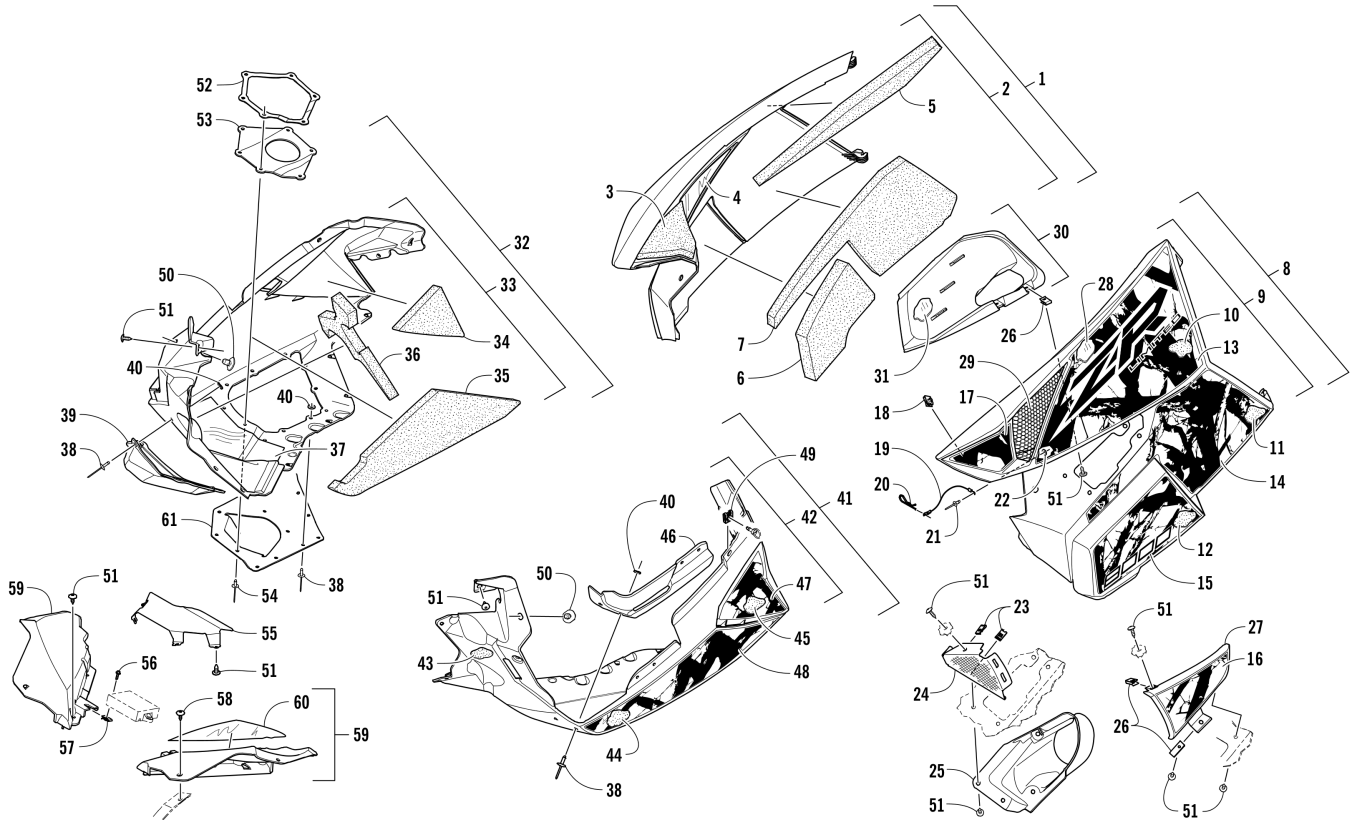

Item	Part No.	New Part	Qty	Name	Context	Footnote
1	5718-202	X	1	Panel, Side - Right w/Decals - White	(inc. 2-7, 13-17, and 19-22)	
2	3718-438		1	Panel, Side - w/o Decals - Right - White	(inc. 3-7 and 19-22)	
3	0617-626		1	Foam, Side Panel - Upper Front - Right		
4	6606-414		1	Foil, Protective		
5	0617-628		1	Foam, Side Panel - Upper Rear - Right		
6	0617-632		1	Foam, Side Panel - Lower Front - Right		
7	0617-634		1	Foam, Side Panel - Lower Rear - Right		
8	5718-203	X	1	Panel, Side - Left w/Decals - White	(inc. 9-22)	
9	4718-555		1	Panel, Side - w/o Decals - Left - White	(inc. 10-12 and 18-22)	
10	0617-629		1	Foam, Side Panel - Upper Rear - Left		
11	0617-635		1	Foam, Side Panel - Lower Rear - Left		
12	0617-681		1	Foam, Side Panel - Lower Front - Left		
13	3621-412	X	1	Decal, Side Panel - Upper - Right - White		
13	3621-413	X	1	Decal, Side Panel - Upper - Left - White		
14	3621-414	X	1	Decal, Side Panel - Lower - Right		
14	3621-415	X	1	Decal, Side Panel - Lower - Left		
15	3621-406	X	1	Decal, Side Panel - "8000" - Right		
15	3621-407	X	1	Decal, Side Panel - "8000" - Left		
16	3621-410	X	1	Decal, Side Panel - Mid - Right		
16	3621-419	X	1	Decal, Side Panel Vent - Left		
17	3621-408	X	1	Decal, Side Panel - Upper - Right		
17	3621-409	X	1	Decal, Side Panel - Upper - Left		

Item	Part No.	New Part	Qty	Name	Context	Footnote
18	1623-637		1	Clip, U-Nut		
19	0607-447		2	Cable		
20	0605-283		2	Clip, Hairpin		
21	8060-486		2	Rivet		
22	8050-127		2	Washer		
23	1623-052		2	Clip, U-Nut		
24	6606-925		1	Screen, Intake		
25	2602-794		1	Duct, Intake - Inner		
26	1623-030		2	Clip, U-Nut		
27	2602-803		1	Duct, Intake - Outer - White		
28	0619-206		AR	Foil, Protective -	Optional	
29	5706-531		1	Screen, Intake -	Optional	
30	1702-369		1	Duct, Belt Cooling	(inc. 31)	
31	6606-694		1	Foil, Protective		
32	5718-158	X	1	Plate, Skid - w/Decals - Right - White	(inc. 33-38, 40, and 47-48)	
33	5718-198	X	1	Plate, Skid - w/o Decals - Right - White	(inc. 34-38 and 40)	
34	0617-640		1	Foam, Skid Plate - Upper Rear - Right		
35	0617-638		1	Foam, Skid Plate - Center Front - Right		
36	0617-636		1	Foam, Skid Plate - Upper Front - Right		
37	2612-970		1	Foil, Protective		
38	8061-688		AR	Rivet		
39	2612-754		1	Deflector, Heat		
40	0123-802		11	Washer		
41	5718-159	X	1	Plate, Skid - w/Decals - Left - White	(inc. 38, 40, and 42-48)	
42	4718-533		1	Panel, Side - Left w/o Decals - Black	(inc. 38, 40, and 43-46)	
43	0617-637		1	Foam, Skid Plate - Upper Front - Left		
44	0617-639		1	Foam, Skid Plate - Center Front - Left		
45	0617-641		1	Foam, Skid Plate - Upper Rear - Left		
46	6606-613		1	Panel, Reinforcement		
47	3621-396	X	1	Decal, Skid Plate - Right - White		
47	3621-397	X	1	Decal, Skid Plate - Left - White		
48	3621-398	X	1	Decal, Skid Plate - Front - Right		
48	3621-399	X	1	Decal, Skid Plate - Front - Left		
49	2623-005		2	Clip, Retaining		
50	6606-592		2	Pin, Retaining		
51	1623-129		15	Screw, Self-Tapping		
52	2612-972		1	Plate, Exhaust Outlet		
53	2612-971		1	Seal, Exhaust Outlet		
54	8061-710		6	Rivet		
55	6606-295		1	Shield, Heat - EMC		
56	8408-620		2	Screw, Cap		

Item	Part No.	New Part	Qty	Name	Context	Footnote
57	0423-031		2	Clip, U-Nut		
58	0623-784		2	Screw, Self-Tapping		
59	6606-342		1	Fascia, Front - Right - Black		
59	3718-303		1	Fascia, Front - Left - Black	(inc. 60)	
60	6606-405		1	Foil, Protective		
61	1712-963		1	Deflector, Exhaust Outlet - Black		

SLIDE RAIL AND TRACK ASSEMBLY [104632]

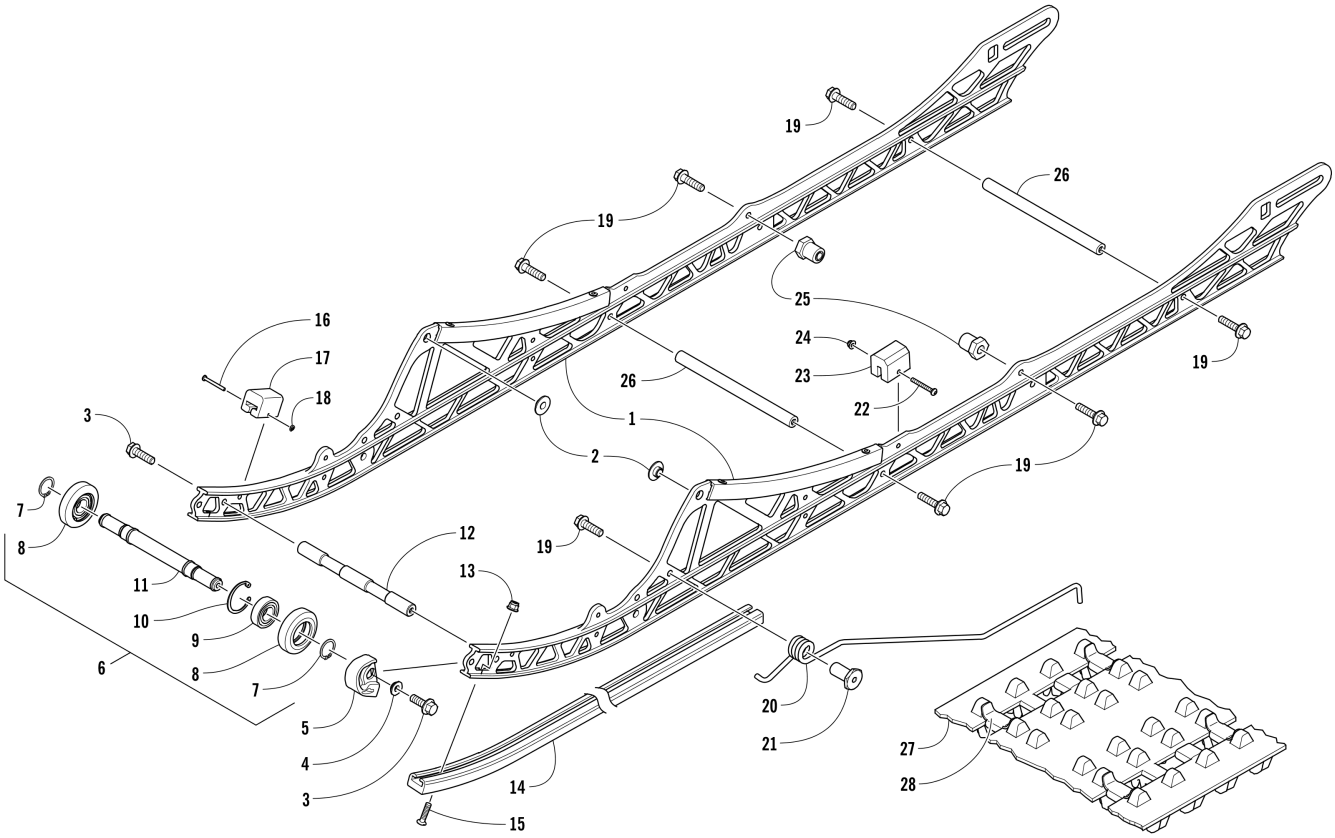

Item	Part No.	New Part	Qty	Name	Context	Footnote
-	3704-073	X	1	Complete Skid Frame Assembly - White		
1	3704-074	X	2	Rail, Formed - Orange		
2	3604-266		2	Insert, Rail		
3	8408-831		4	Screw, Cap		
4	3604-928		2	Spacer		
5	4604-214	X	2	End Cap, Slide Rail		
6	2704-964		1	Axle, Idler Wheel - Assembly	(inc. 7-11)	
7	1423-001		2	Ring, Retaining		
8	3604-844		2	Wheel, Idler - Black	(inc. 9-10)	
9	3604-033		2	Bearing		
10	0623-946		2	Ring, Retaining		
11	3604-921		1	Axle		
12	3604-630		1	Axle		
13	8047-366		2	Nut, Lock		
14	4604-241	X	2	Wearstrip, Slide Rail		
15	0123-859		2	Screw, Machine		
16	0123-767		2	Rivet, Solid		
17	0104-631		2	Pad, Shock		
18	0123-766		2	Nut, Push		
19	8408-826		8	Screw, Cap		
20	1704-734		1	Scratcher, Ice - Right		
20	1704-735		1	Scratcher, Ice - Left		
21	3604-678		2	Bushing		

Item	Part No.	New Part	Qty	Name	Context	Footnote
22	8470-540		2	Screw, Machine		
23	1604-429		2	Pad, Shock		
24	8427-502		2	Nut, Lock		
25	3604-635		2	Bushing, Stop - Rear Arm		
26	4604-252	X	2	Axle		
27	2602-481		1	Track Assembly	(inc. 28)	
28	2602-386		52	Clip, Guide		

STEERING POST ASSEMBLY [103895]

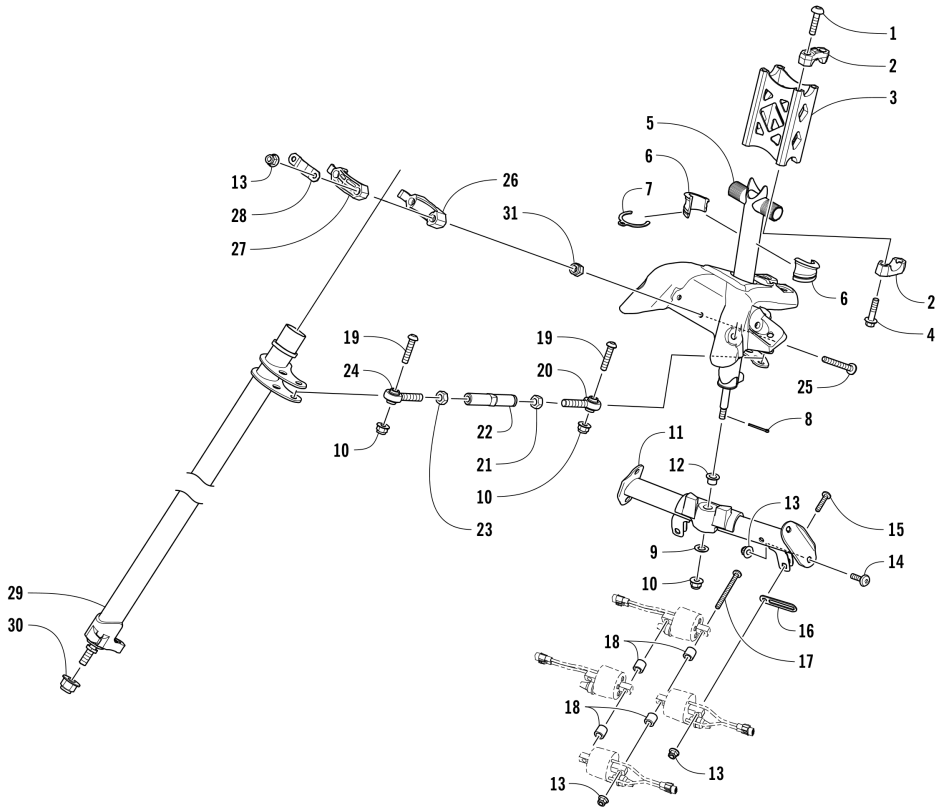

Item	Part No.	New Part	Qty	Name	Context	Footnote
1	8477-830		4	Screw, Machine		
2	1705-461		4	Cap, Riser Block - Black		
3	1705-415		1	Block, Riser - Black		
4	8408-830		4	Screw, Cap		
5	1705-395		1	Post, Steering - Upper - Black		
6	1605-054		1	Bearing - Right		
6	1605-055		1	Bearing - Left		
7	1605-056		1	Ring, Retaining		
8	0623-175		1	Pin, Cotter		
9	1605-067		1	Washer, Thrust		
10	8427-802		3	Nut, Lock		
11	1705-397		1	Bracket, Steering Support	(inc. 12)	
12	1605-057		1	Bearing		
13	8427-602		10	Nut, Lock		
14	8476-625		4	Screw, Machine		
15	8468-625		2	Screw, Machine		
16	1623-984		1	Clamp, Routing		
17	8468-665		2	Screw, Machine		
18	1623-041		4	Spacer		
19	2623-026		2	Screw, Machine		
20	1605-032		1	Ball Joint, Tie Rod - Right-Hand Thread		
21	8420-002		1	Nut - Right-Hand Thread		
22	1605-053		1	Tube, Tie Rod		

Item	Part No.	New Part	Qty	Name	Context	Footnote
23	0423-013		1	Nut - Left-Hand Thread		
24	1605-051		1	Ball Joint, Steering - Left-Hand Thread		
25	2623-079		2	Screw, Machine		
26	1605-128		1	Block, Mounting - Steering Post		
27	1605-127		1	Block, Mounting - Steering Post - Upper		
28	0605-998		1	Plate, Retaining		
29	1705-524	X	1	Post, Steering - Lower		
30	2623-076		1	Nut, Lock w/Washer		
31	8422-602		2	Nut		

STEERING SUPPORT ASSEMBLY [103905]

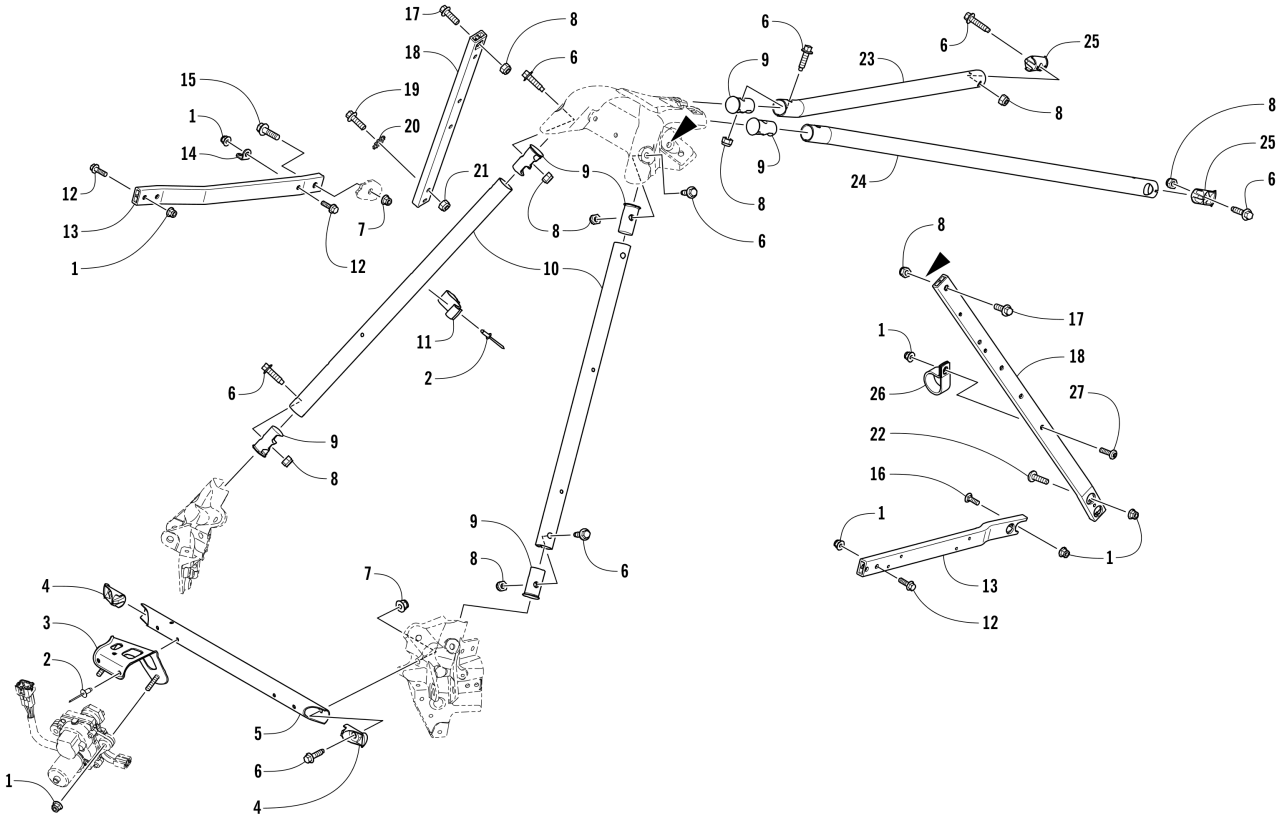

Item	Part No.	New Part	Qty	Name	Context	Footnote
1	8427-602		11	Nut, Lock		
2	8060-686		5	Rivet		
3	4706-845		1	Bracket, Mounting - Servomotor		
4	1607-002		2	Insert		
5	1607-351		1	Support, Shock Mount Bracket		
6	2623-121		10	Screw, Cap		
7	8427-802		3	Nut, Lock		
8	8422-802		10	Nut, Lock		
9	1607-747		6	Insert		
10	1607-352		2	Spar, Front		
11	1623-938		2	Clamp, Routing		
12	8408-630		5	Screw, Cap		
13	0607-248		1	Support, Chassis - Right		
13	1607-583		1	Support, Chassis - Left		
14	2612-707		1	Tab, Spring		
15	8408-885		1	Screw, Cap		
16	1623-917		2	Bolt, Carriage		
17	8408-820		2	Screw, Cap		
18	0607-252		1	Support, Side - Rear - Right		
18	1607-581		1	Support, Side - Rear - Left		
19	8408-625		2	Screw, Cap		
20	8053-212		1	Washer, External Tooth Lock		
21	8422-602		2	Nut		

Item	Part No.	New Part	Qty	Name	Context	Footnote
22	8476-616		2	Screw, Machine		
23	2707-504		1	Spar, Rear - Right		
24	2707-505		1	Spar, Rear - Left		
25	1607-680		2	Insert		
26	2623-083		1	Clamp, Routing		
27	8476-630		1	Screw, Machine		

THROTTLE BODY ASSEMBLY [91588]

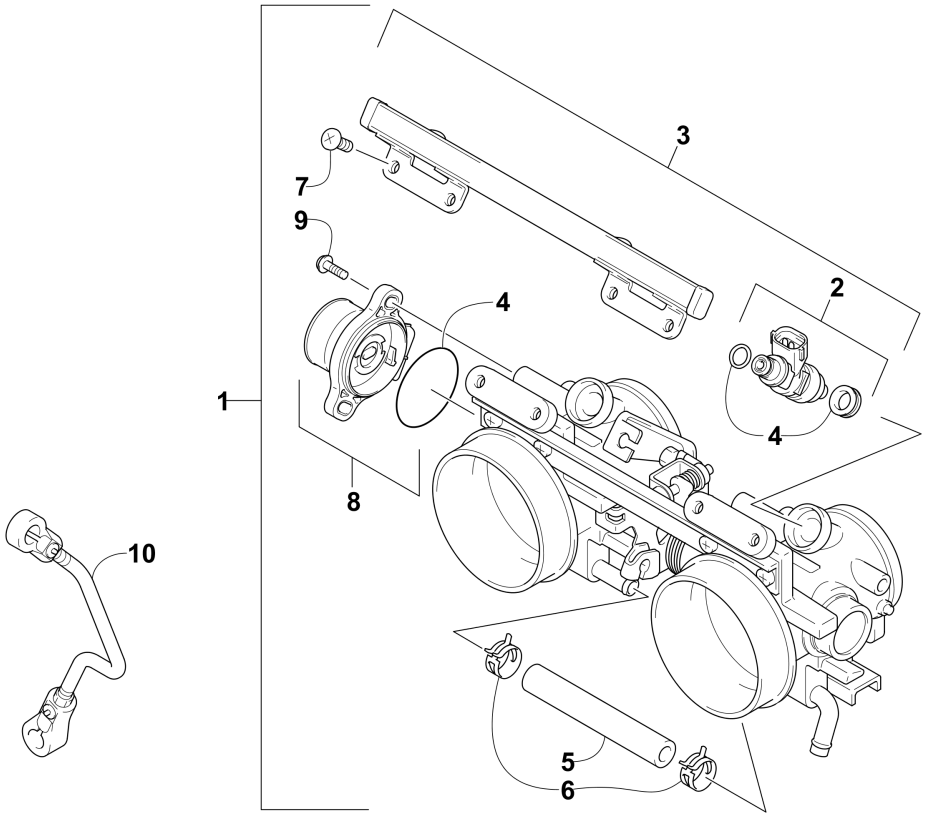

Item	Part No.	New Part	Qty	Name	Context	Footnote
1	3007-890		1	Body, Throttle - Assembly	(inc. 2-9)	
2	3007-891		2	Injector, Fuel - Assembly		Circle
2	3007-892		2	Injector, Fuel - Assembly		Square
2	3007-893		2	Injector, Fuel - Assembly		Triangle
3	3007-442		1	Pipe, Delivery		
4	3005-692		1	O-Ring - Set		
5	3006-723		1	Hose		
6	3004-193		2	Clamp, Hose		
7	3007-443		4	Screw		
8	3006-939		1	Sensor, Throttle Position - Assembly		
9	3007-026		2	Screw, Machine		
10	3007-538		1	Rod, Control		

TIE ROD ASSEMBLY [102614]

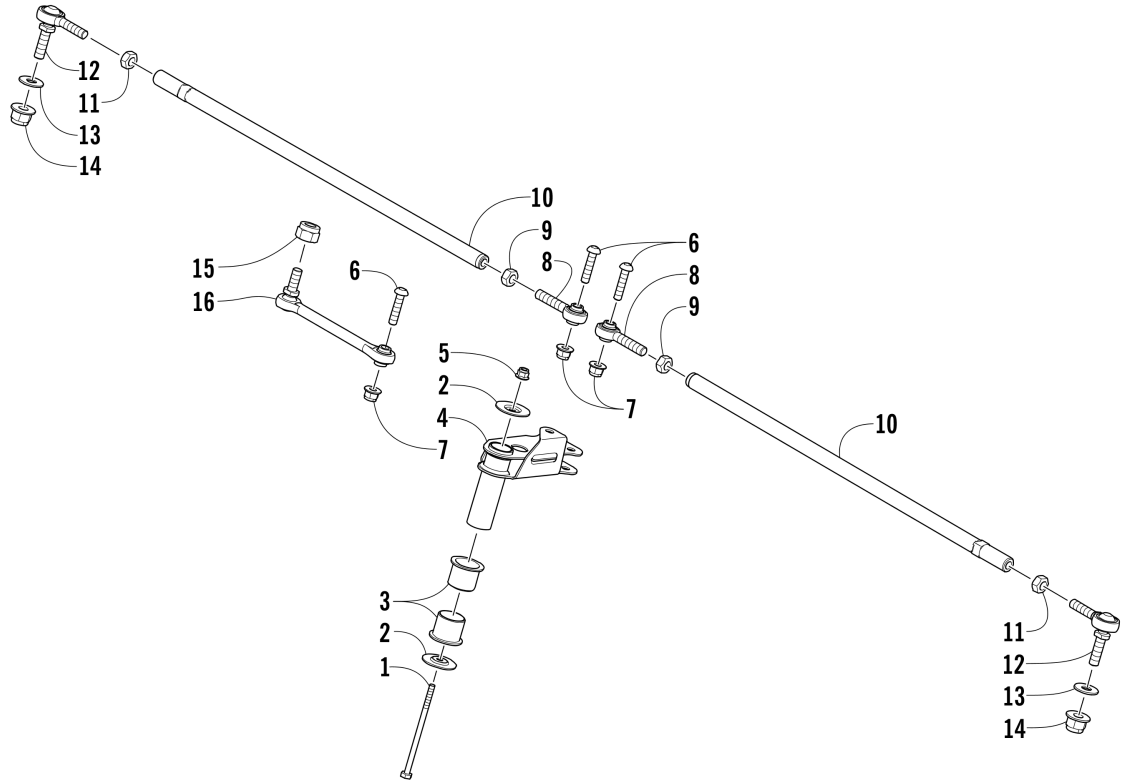

Item	Part No.	New Part	Qty	Name	Context	Footnote
1	8402-600		1	Screw, Cap		
2	1623-807		2	Washer		
3	1605-161		2	Bushing		
4	1705-488		1	Arm, Steering		
5	8427-602		1	Nut, Lock		
6	2623-026		3	Screw, Machine		
7	8427-802		3	Nut, Lock		
8	1605-032		2	Ball Joint, Tie Rod - Right-Hand Thread		
9	8420-002		2	Nut - Right-Hand Thread		
10	1605-150		2	Tube, Tie Rod - Spindle		
11	0423-013		2	Nut - Left-Hand Thread		
12	1605-019		2	Ball Joint, Steering - Left-Hand Thread		
13	1623-803		2	Washer		
14	8427-002		2	Nut, Lock		
15	8422-002		1	Nut, Lock		
16	1605-072		1	Tie Rod, Steering		

TUNNEL, REAR BUMPER, AND SNOWFLAP ASSEMBLY [104634]

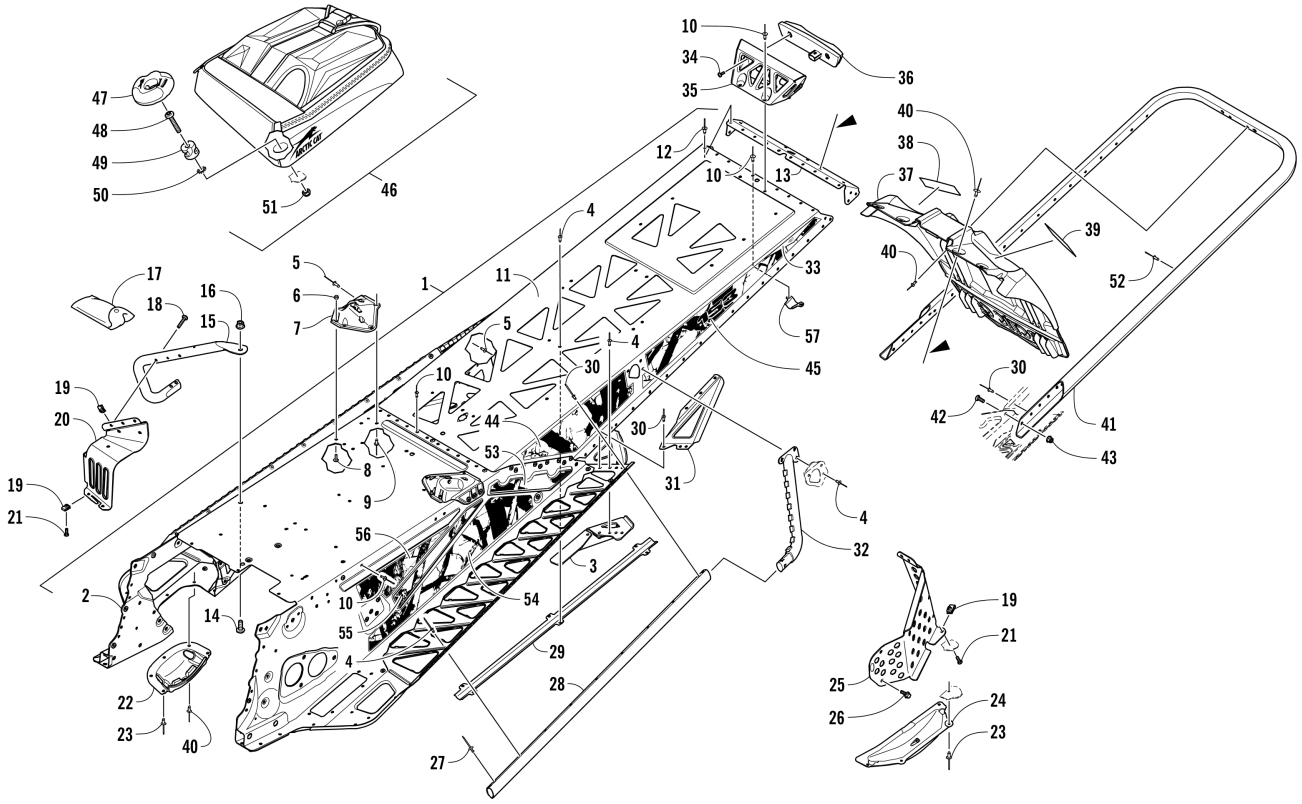

Item	Part No.	New Part	Qty	Name	Context	Footnote
–	2707-105		1	Complete Chassis Assembly White		
1	2707-298		1	Tunnel Assembly White	(inc. 2-13)	
2	2707-297		1	Tunnel, Front - Assembly - White	(inc. 3-4)	
3	2707-290		1	Bracket, Mounting - Suspension - Right - White		
3	2707-291		1	Bracket, Mounting - Suspension - Left - White		
4	8060-686		AR	Rivet	Zinc	
5	1623-206		14	Rivet		
6	8422-502		6	Nut, Lock		
7	1707-904		1	Bracket, Mounting - Rear Spar - Right - White		
7	1707-905		1	Bracket, Mounting - Rear Spar - Left - White		
8	8476-512		6	Screw, Machine		
9	1623-257		2	Rivet		
10	8060-702		AR	Rivet	Black	
11	1707-993		1	Tunnel, Rear White		
12	8060-482		AR	Rivet		
13	1707-834		1	End Cap, Tunnel - White		
14	8476-820		2	Screw, Machine		
15	1707-454		1	Support, Footrest - Right		
15	1707-455		1	Support, Footrest - Left		
16	8427-802		2	Nut, Lock		
17	0744-090		1	Kit, Tool		
18	8468-535		4	Screw, Machine		
19	1623-637		9	Clip, U-Nut		

Item	Part No.	New Part	Qty	Name	Context	Footnote
20	1707-802		1	Footrest - Right - White		
20	1707-803		1	Footrest - Left - White		
21	8470-516		5	Screw, Machine		
22	1607-109		1	Protector, Chain Case		
23	8061-708		AR	Rivet		
24	0607-351		1	Protector, Brake Disc		
25	2707-084		1	Shield, Brake Disc - White		
26	8408-613		2	Screw, Cap		
27	1623-130		AR	Rivet		
28	1707-899		2	Roll, Tunnel - White		
29	0630-307		1	Protector, Harness - Taillight Extension		
30	1623-241		AR	Rivet		
31	2707-292		1	Gusset, Running Board - Right - White		
31	2707-293		1	Gusset, Running Board - Left - White		
32	1707-908		1	Gusset, Tunnel Roll - Right - White		
32	1707-909		1	Gusset, Tunnel Roll - Left - White		
33	0621-990		2	Decal, Reflector		
34	8470-510		2	Screw, Machine		
35	0730-228		1	Bracket, Mounting - Taillight - White		
36	0609-898		1	Taillight, LED		
37	6606-394		1	Snowflap		
38	5611-852		1	Decal, Warning - Towing - French		
39	5611-853		1	Decal, Warning - Towing - English		
40	8061-706		6	Rivet		
41	2707-593		1	Bumper, Rear - 153" - Painted Orange		
42	8476-620		2	Screw, Machine		
43	8427-602		2	Nut, Lock		
44	3621-386	X	1	Decal, Tunnel - Right		
44	3621-387	X	1	Decal, Tunnel - Left		
45	3621-540	X	1	Decal, Tunnel - "153" - Right - White		
45	3621-541	X	1	Decal, Tunnel - "153" - Left - White		
46	7639-434		1	Bag, Shovel Pack	(inc. 47-51)	
47	2623-204		4	Ring, Camlock		
48	8468-525		4	Screw, Machine		
49	2623-203		4	Spool, Camlock		
50	0423-377		4	Washer, External Tooth Lock		
51	8431-503		4	Nut, Lock		
52	8060-706		AR	Rivet	Black	
53	3621-388	X	1	Decal, Tunnel - Right		
53	3621-389	X	1	Decal, Tunnel - Left		
54	3621-390	X	1	Decal, Tunnel - Right		
54	3621-391	X	1	Decal, Tunnel - Left		

Item	Part No.	New Part	Qty	Name	Context	Footnote
55	3621-392	X	1	Decal, Tunnel - Right		
55	3621-393	X	1	Decal, Tunnel - Left		
56	3621-394	X	1	Decal, Tunnel - Right		
56	3621-395	X	1	Decal, Tunnel - Left		
57	0630-292		1	Protector, Harness - Taillight		

WATER PUMP AND THERMOSTAT [93330]

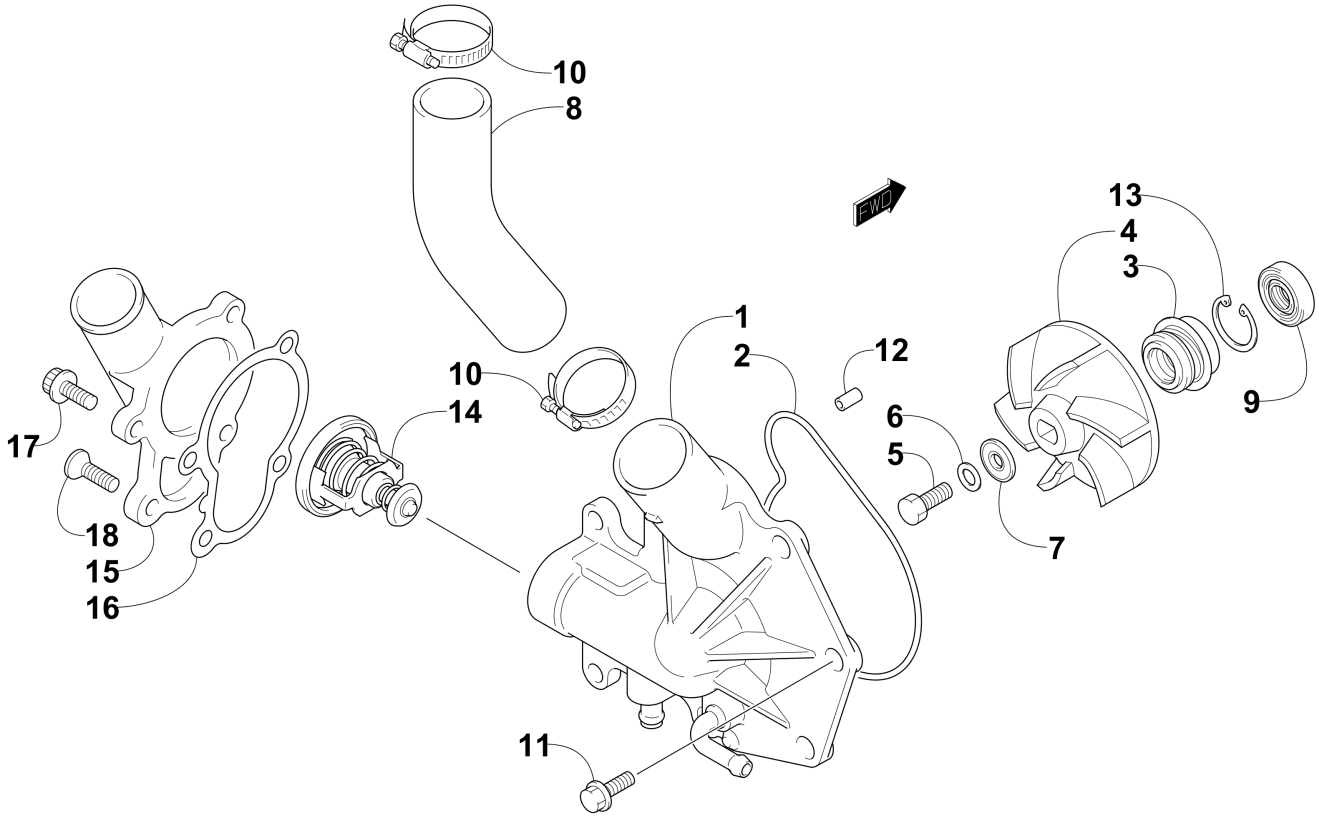

Item	Part No.	New Part	Qty	Name	Context	Footnote
1	3007-540		1	Cover, Water Pump		
2	3007-541		1	O-Ring, Cover		
3	3007-180		1	Seal		
4	3007-896		1	Impeller		
5	3003-426		1	Bolt, Shaft		
6	3003-431		1	Washer, Shaft		
7	3003-432		1	Washer		
8	3007-542		1	Hose, Water Inlet		
9	3007-431		1	Seal, Oil		
10	3004-786		2	Clamp		
11	3007-409		7	Bolt		
12	3005-899		2	Pin, Dowel		
13	3007-714		1	Circlip, Bearing - Fastener		
14	3007-041		1	Thermostat, Water		
15	3007-304		1	Housing, Thermostat		
16	3007-543		1	Gasket, Thermostat Cap		
17	3007-446		3	Bolt, Thermostat Cap		
18	3007-306		1	Screw, Machine		

WINDSHIELD AND INSTRUMENTS ASSEMBLIES [104623]

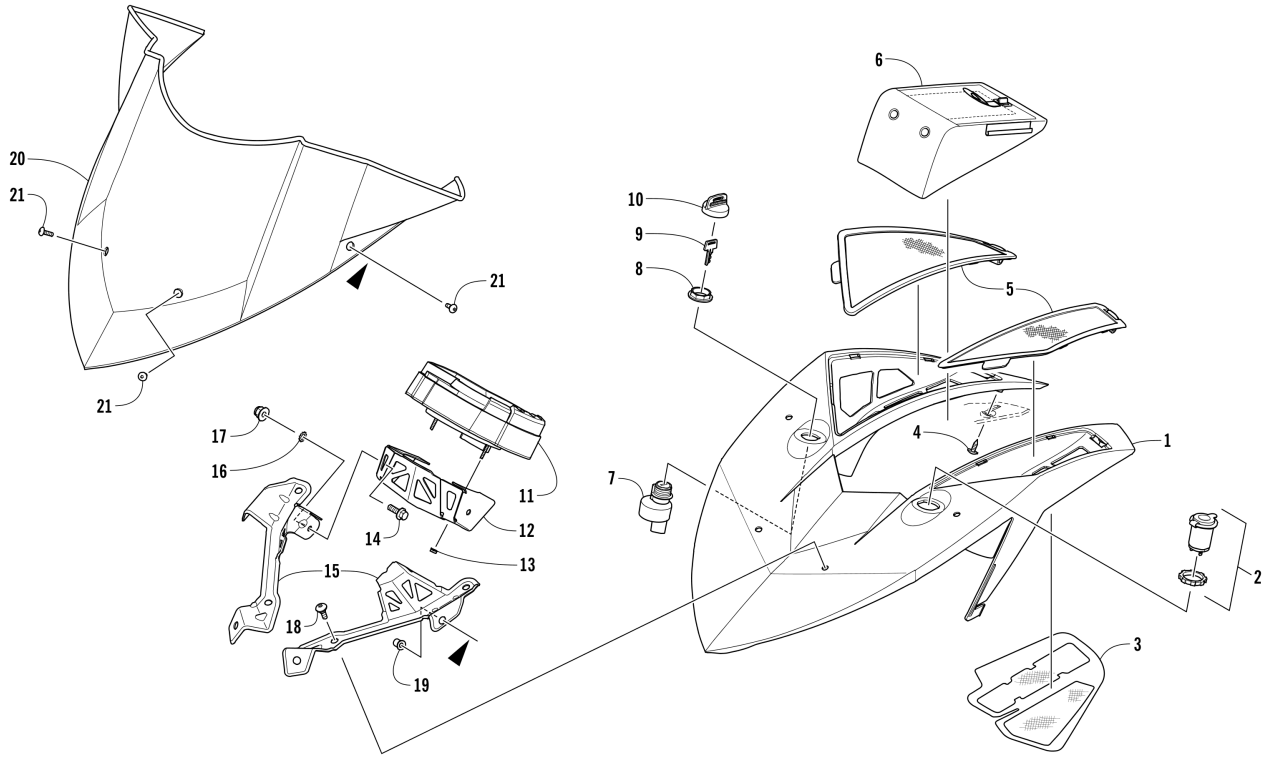

Item	Part No.	New Part	Qty	Name	Context	Footnote
1	5706-235		1	Pod, Instrument - White		
2	0641-897		1	Outlet, Accessory - 12V		
3	0608-688		1	Screen, Intake - Right		
3	0608-689		1	Screen, Intake - Left		
4	1623-129		2	Screw, Self-Tapping		
5	0608-736		1	Vent, Intake - Right		
5	0608-737		1	Vent, Intake - Left		
6	6606-566		1	Bag, Goggle		
7	0609-910		1	Switch, Ignition	(inc. 8-10)	
8	0430-050		1	Nut, Retaining		
9	0430-042		1	Key, Ignition		
9	0430-043		1	Key, Ignition		
10	0430-054		1	Cover, Key		
11	0620-391		1	Gauge, Speedometer		
12	5706-651		1	Bracket, Speedometer Gauge - Center - White		
13	0423-493		2	Nut w/Washer		
14	8410-616		2	Screw, Cap		
15	5706-652		1	Bracket, Speedometer Gauge - Right - White		
15	5706-653		1	Bracket, Speedometer Gauge - Left - White		
16	8053-212		2	Washer, External Tooth Lock		
17	8427-602		2	Nut, Lock		
18	0423-355		4	Screw, Shoulder		
19	1623-764		4	Nut, Expansion		

Item	Part No.	New Part	Qty	Name	Context	Footnote
20	6606-482		1	Windshield - Low - Orange		
21	8477-516		4	Screw, Machine		

The illustrations used in this Parts Manual are for reference to replacement part numbers only and are not to be used for assembly. For assembly procedures, use an Arctic Cat Service Manual. For a complete list of related items, refer to the current accessory catalog. Once printed, Arctic Cat does not guarantee the accuracy of the information contained in this manual. Our parts lists and illustrations are constantly revised to reflect part number changes, discrepancies, and enhancements.

®™ Trademarks of Arctic Cat Inc., Thief River Falls, MN 56701