2016 ATV ALTERRA 450

Red (US), Green (US)

Contents

AIR INTAKE ASSEMBLY [96409] . . . 1
BATTERY AND STARTER ASSEMBLY [301450] . . . 3
CAM CHAIN ASSEMBLY [301451] . . . 4
CASE/BELT COOLING ASSEMBLY [301448] . . . 5
CLUTCH/V-BELT/MAGNETO COVER ASSEMBLY [301453] . . . 6
COOLING ASSEMBLY [300569] . . . 8
CRANK BALANCER ASSEMBLY [301454] . . . 10
CRANKCASE ASSEMBLY [300573] . . . 11
CRANKSHAFT AND PISTON ASSEMBLY [301452] . . . 13
CYLINDER ASSEMBLY [92762] . . . 14
CYLINDER HEAD AND CAMSHAFT/VALVE ASSEMBLY [300571] . . . 15
DRIVE TRAIN ASSEMBLY [100713] . . . 17
ENGINE AND EXHAUST [100493] . . . 18
FRAME AND RELATED PARTS [301444] . . . 20
FRONT BODY, RACK, AND HEADLIGHT ASSEMBLY [301442] . . . 21
FRONT DRIVE GEARCASE ASSEMBLY [301367] . . . 23
FRONT SUSPENSION ASSEMBLY [300467] . . . 25
GAS TANK ASSEMBLY [300568] . . . 27
GEAR SHIFTING ASSEMBLY [94326] . . . 28
HANDLEBAR ASSEMBLY [301445] . . . 30
HYDRAULIC BRAKE ASSEMBLY [301447] . . . 32
MAGNETO ASSEMBLY [301458] . . . 34
OIL PUMP AND STRAINER ASSEMBLY [301455] . . . 35
REAR BODY, RACK, AND TAILLIGHT ASSEMBLY [301443] . . . 36
REAR DRIVE GEARCASE ASSEMBLY [97672] . . . 38
REAR SUSPENSION ASSEMBLY [300468] . . . 40
SEAT ASSEMBLY [301363] . . . 42
SECONDARY DRIVE ASSEMBLY [94327] . . . 43
SECONDARY TRANSMISSION ASSEMBLY [301457] . . . 45
SHIFT LEVER ASSEMBLY [301366] . . . 47
STARTER CLUTCH ASSEMBLY [92888] . . . 48
STEERING ASSEMBLY [300466] . . . 49
THROTTLE BODY ASSEMBLY [300570] . . . 51
TRANSMISSION ASSEMBLY [301456] . . . 52
WATER PUMP ASSEMBLY [301459] . . . 53
WHEEL AND TIRE ASSEMBLY [301446] . . . 54
WIRING HARNESS ASSEMBLY [301449] . . . 55

AIR INTAKE ASSEMBLY [96409]

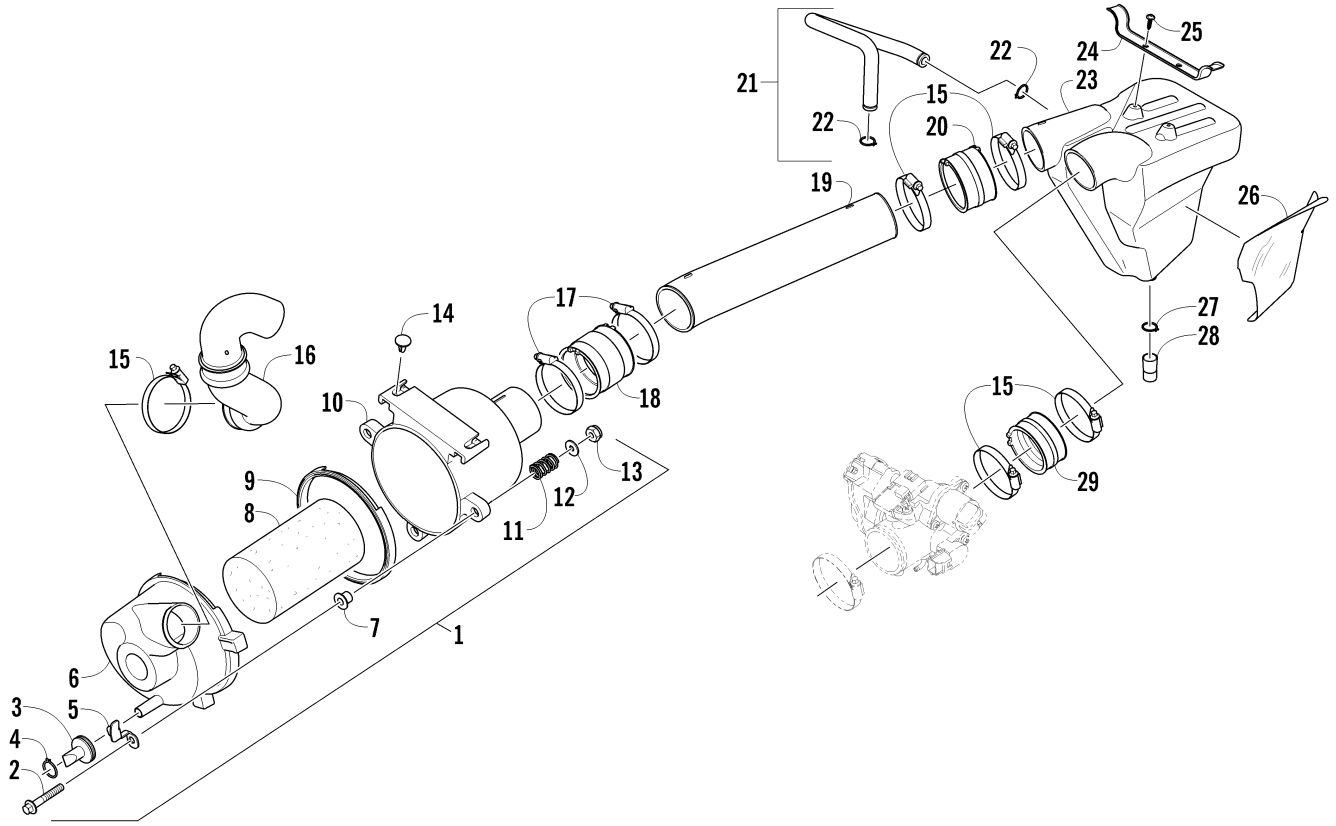

Item	Part No.	Qty	Name	Context	Footnote
1	3313-395	1	Filter, Air - Assembly	(inc. 2-13)	
2	8408-850	3	Screw, Cap		
3	0470-442	1	Valve, Air Cleaner		
4	3313-705	1	Clamp		
5	3313-375	3	Latch		
6	3313-376	1	Cover, Air Filter		
7	3313-853	3	Spacer		
8	3313-378	1	Element, Air Filter		
9	3313-446	1	Gasket, Air Filter		
10	3313-377	1	Housing, Air Filter		
11	0402-678	3	Spring, Shift Lever		
12	8050-222	3	Washer		
13	3303-269	3	Nut		
14	3305-448	2	Clip, Retaining		
15	0423-380	5	Clamp, Hose - Worm (50-70mm x 9mm) - Black		
16	3313-816	1	Boot, Air Intake		
17	3313-817	2	Clamp		
18	3313-275	1	Boot, Air Intake		
19	3313-063	1	Boot, Air Intake		
20	3313-274	1	Boot, Air Intake		
21	3313-397	1	Hose, Oil Catch	(inc. 22)	
22	3304-167	2	Clamp		
23	3313-224	1	Housing, Air Intake		

Item	Part No.	Qty	Name	Context	Footnote
24	3313-356	1	Bracket, Mounting - Air Intake Housing		
25	3304-409	2	Bolt Washer 5*12		
26	3313-362	1	Shield, Heat		
27	3313-706	1	Clamp		
28	3313-543	1	Pipe, Drain		
29	3306-309	1	Boot, Air Intake		

BATTERY AND STARTER ASSEMBLY [301450]

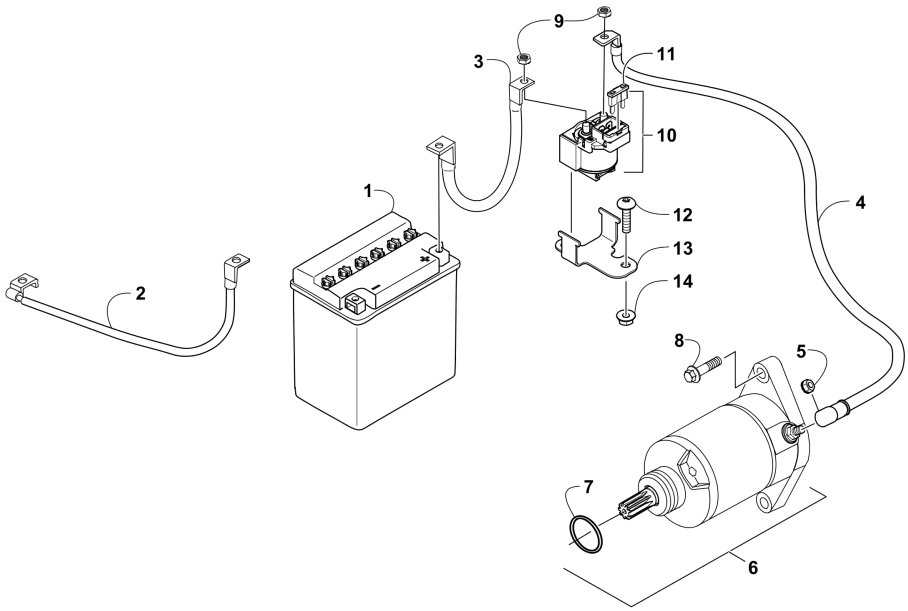

Item	Part No.	Qty	Name	Context	Footnote
1	3306-301	1	Battery Assembly		
2	3307-192	1	Cable, Battery/Ground		
3	3307-194	1	Cable, Battery/Solenoid		
4	3307-129	1	Cable, Solenoid/Starter		
5	3304-011	1	Nut w/Washer		
6	3305-954	1	Motor, Starter - Assembly	(inc. 7)	
7	3304-104	1	O-Ring		
8	3305-946	2	Screw, Cap		
9	3304-654	2	Nut, Flange - 6 mm		
10	3313-464	1	Solenoid	(inc. 11)	
11	3304-212	1	Fuse - 30 Amp		
12	3305-703	2	Screw, Machine		
13	3313-467	1	Bracket, Mounting - Solenoid		
14	3304-431	2	Nut, Lock		

CAM CHAIN ASSEMBLY [301451]

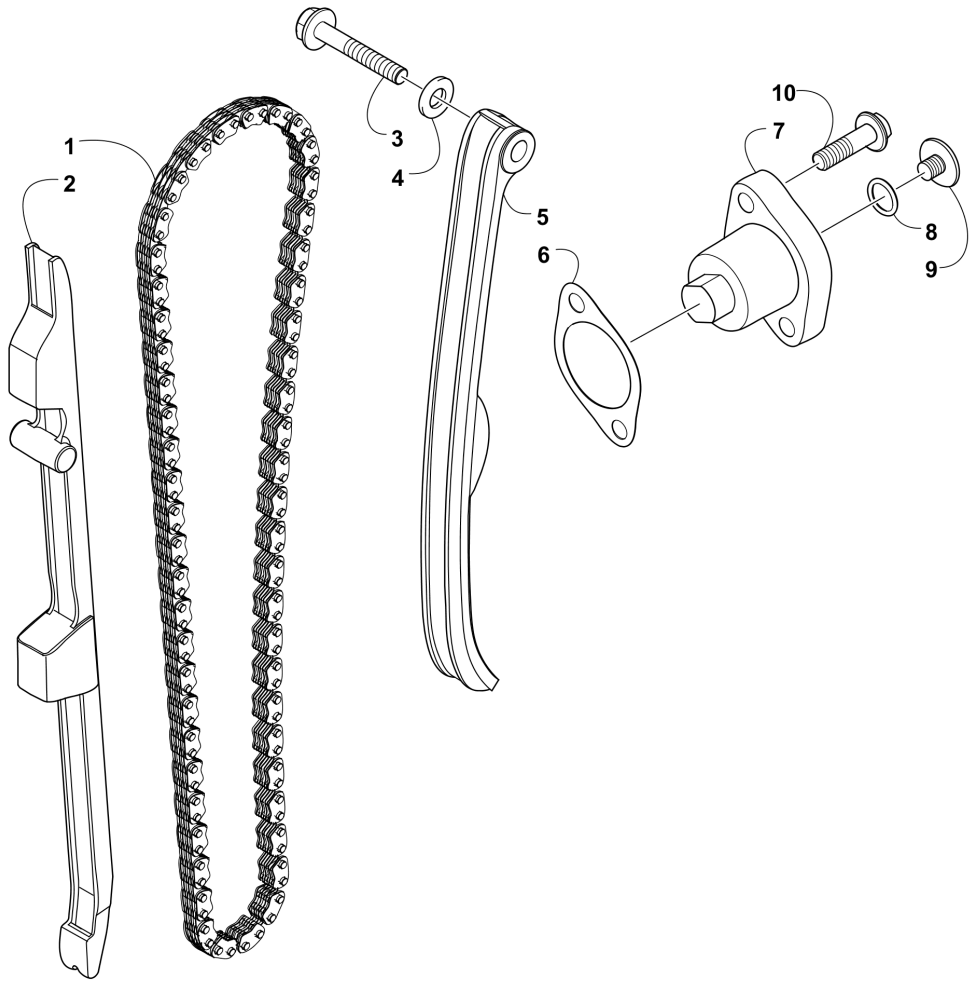

Item	Part No.	Qty	Name	Context	Footnote
1	0810-005	1	Chain, Cam		
2	0810-068	1	Guide, Chain		
3	0826-133	1	Pivot, Tensioner		
4	0830-150	1	Washer		
5	0810-007	1	Tensioner, Chain		
6	3303-035	1	Gasket		
7	3307-102	1	Adjuster, Tensioner - Assembly		
8	3304-100	1	O-Ring		
9	3307-125	1	Screw, Adjuster		
10	3304-569	2	Screw, Cap		

CASE/BELT COOLING ASSEMBLY [301448]

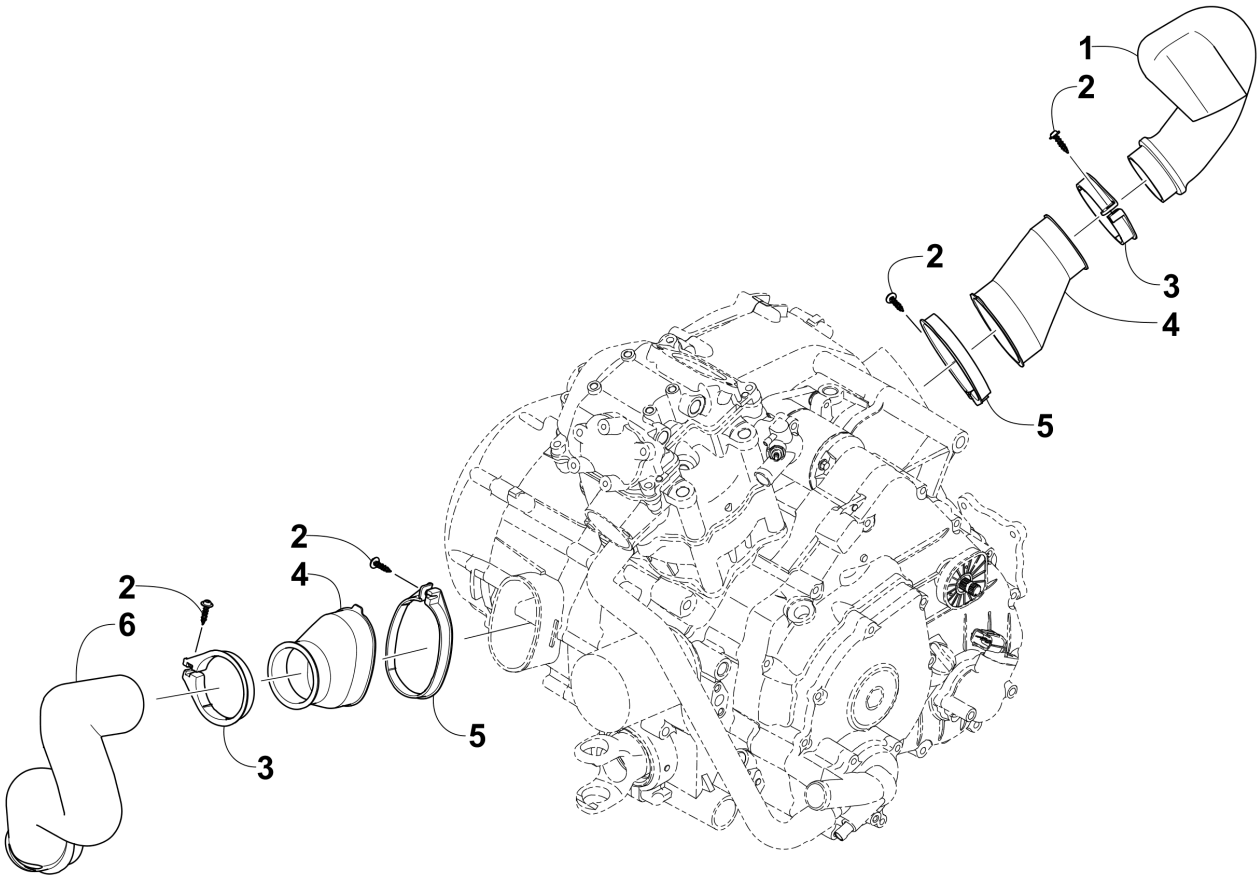

Item	Part No.	Qty	Name	Context	Footnote
1	3306-532	1	Duct, Air Out		
2	0423-342	4	Screw, Self-Tapping		
3	0423-551	2	Clamp		
4	3313-782	2	Boot, Duct		
5	0423-550	2	Clamp		
6	3313-065	1	Duct, Belt - Air In		

CLUTCH/V-BELT/MAGNETO COVER ASSEMBLY [301453]

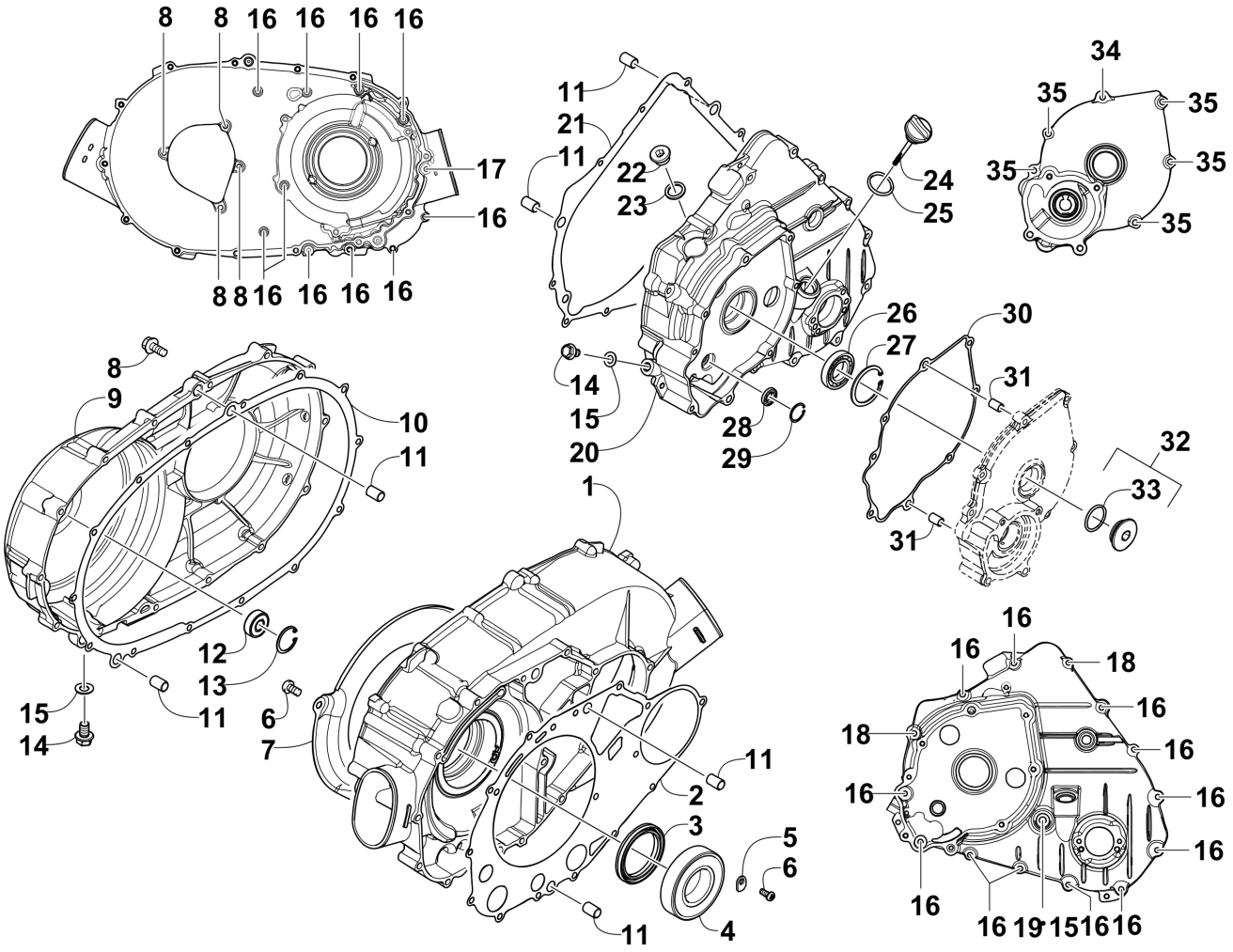

Item	Part No.	Qty	Name	Context	Footnote
1	0806-026	1	Cover, Clutch		
2	0830-055	1	Gasket		
3	0830-157	1	Seal		
4	0832-071	1	Bearing		
5	0822-104	2	Retainer, Bearing		
6	0826-144	5	Screw, PPH - M6 x 1 x 12		
7	0806-103	1	Plate, Air Intake		
8	3303-386	18	Bolt, Flange		
9	0806-027	1	Cover, Drive Belt		
10	0830-056	1	Gasket		
11	0829-046	6	Pin, Dowel		
12	0832-023	1	Bearing		
13	3303-347	1	Ring, Retaining		
14	3304-544	2	Screw, Cap		
15	3303-591	3	Washer		
16	3307-053	22	Bolt, Flange		
17	3307-054	1	Screw, Cap		
18	3307-062	2	Screw, Cap		
19	3307-060	1	Screw, Cap		

Item	Part No.	Qty	Name	Context	Footnote
20	0806-122	1	Cover, Magneto		
21	0830-057	1	Gasket		
22	0806-099	1	Plug		
23	0830-141	1	Washer, Crush		
24	0806-029	1	Stick, Oil Level	(inc. 25)	
25	3304-102	1	O-Ring		
26	0832-053	1	Bearing		
27	3305-943	1	Ring, Retaining		
28	3305-944	1	Bearing		
29	3305-942	1	Ring, Retaining		
30	0830-206	1	Gasket		
31	3301-716	2	Pin, Dowel		
32	0812-087	1	Plug - Assembly	(inc. 33)	
33	0835-016	1	O-Ring		
34	3307-055	1	Screw, Cap		
35	3304-189	5	Bolt, Flange		

COOLING ASSEMBLY [300569]

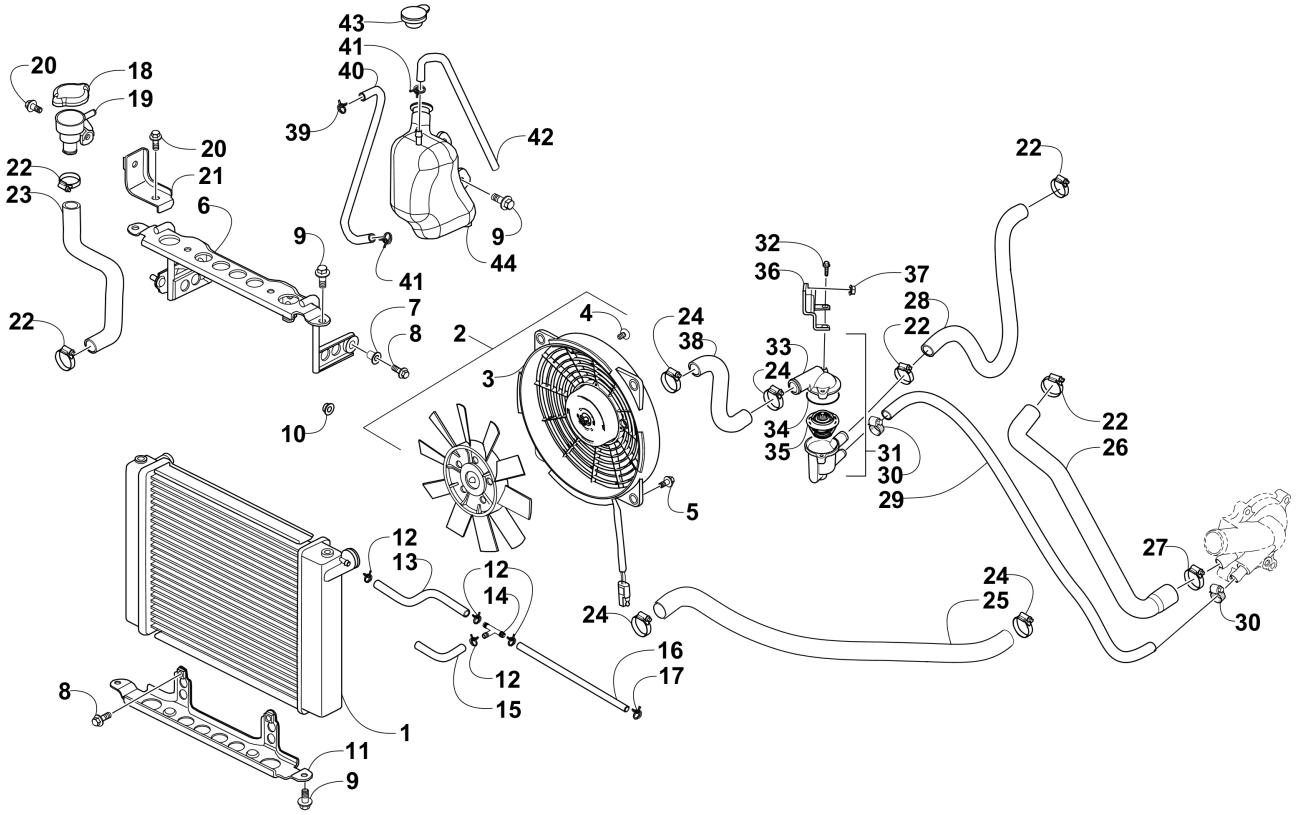

Item	Part No.	Qty	Name	Context	Footnote
1	3306-334	1	Radiator		
2	3306-333	1	Fan, Cooling - Assembly	(inc. 3-4)	
3	3306-335	1	Shroud, Fan		
4	3306-405	4	Screw, Shoulder		
5	3304-587	4	Screw, Cap		
6	3306-347	1	Bracket, Mounting - Upper		
7	3303-226	2	Insert		
8	3304-551	4	Bolt, Flange - 6 x 22		
9	3304-652	6	Screw, Cap		
10	0423-028	2	Bushing		
11	3306-348	1	Bracket, Mounting - Lower		
12	3304-161	5	Clamp, Hose		
13	3306-345	1	Hose, Coolant - Radiator/T-Fitting		
14	3306-346	1	T-Fitting		
15	3306-374	1	Hose, Coolant - T-Fitting/Filler Neck		
16	3306-375	1	Hose, Coolant - T-Fitting/Engine		
17	3306-349	1	Clamp, Hose		
18	3303-748	1	Cap, Filler Neck		
19	3303-738	1	Neck, Filler		
20	3304-553	2	Bolt, Flange - 6 x 12		
21	3306-336	1	Bracket, Mounting - Filler Neck		
22	1423-008	5	Clamp, Hose		
23	3306-344	1	Hose, Coolant - Filler Neck/Radiator		

Item	Part No.	Qty	Name	Context	Footnote
24	3306-256	4	Clamp, Hose		
25	3306-343	1	Hose, Coolant - Radiator/Water Pump		
26	0410-216	1	Hose, Coolant - Water Pump/Cylinder		
27	3305-941	1	Clamp, Hose		
28	3306-255	1	Hose, Coolant - Thermostat/Cylinder		
29	3306-258	1	Hose, Coolant - Thermostat/Water Pump		
30	0423-098	2	Clamp, Hose		
31	0808-192	1	Housing, Thermostat - Assembly	(inc. 31-34)	
32	3303-384	2	Bolt, Flange		
33	0808-202	1	Cover, Housing - Thermostat		
34	0830-205	1	O-Ring		
35	0813-050	1	Thermostat		
36	3306-260	1	Bracket, Mounting - Thermostat Housing		
37	3304-654	1	Nut, Flange - 6 mm		
38	3306-257	1	Hose, Coolant - Radiator/Thermostat		
39	3303-349	1	Clamp, Hose		
40	3306-340	1	Hose, Coolant - Reservoir/Filler Neck		
41	3304-163	2	Clamp, Hose		
42	3306-339	1	Hose, Vent		
43	3303-749	1	Cap, Reservoir		
44	3313-661	1	Tank, Reservoir		

CRANK BALANCER ASSEMBLY [301454]

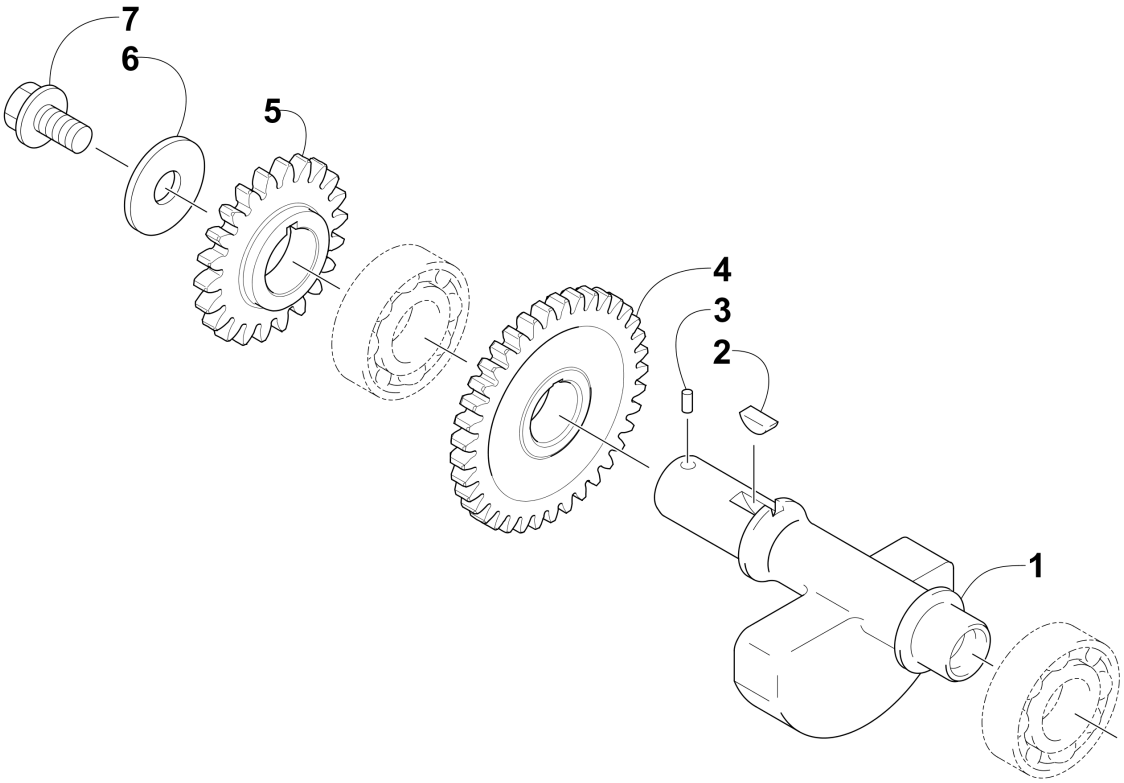

Item	Part No.	Qty	Name	Context	Footnote
1	0811-035	1	Balancer, Crank		
2	0829-037	1	Key		
3	3304-144	1	Pin, Alignment		
4	0811-006	1	Gear, Driven		
5	0811-009	1	Gear, Oil Pump Drive		
6	0828-091	1	Washer		
7	0826-118	1	Screw, Cap		

CRANKCASE ASSEMBLY [300573]

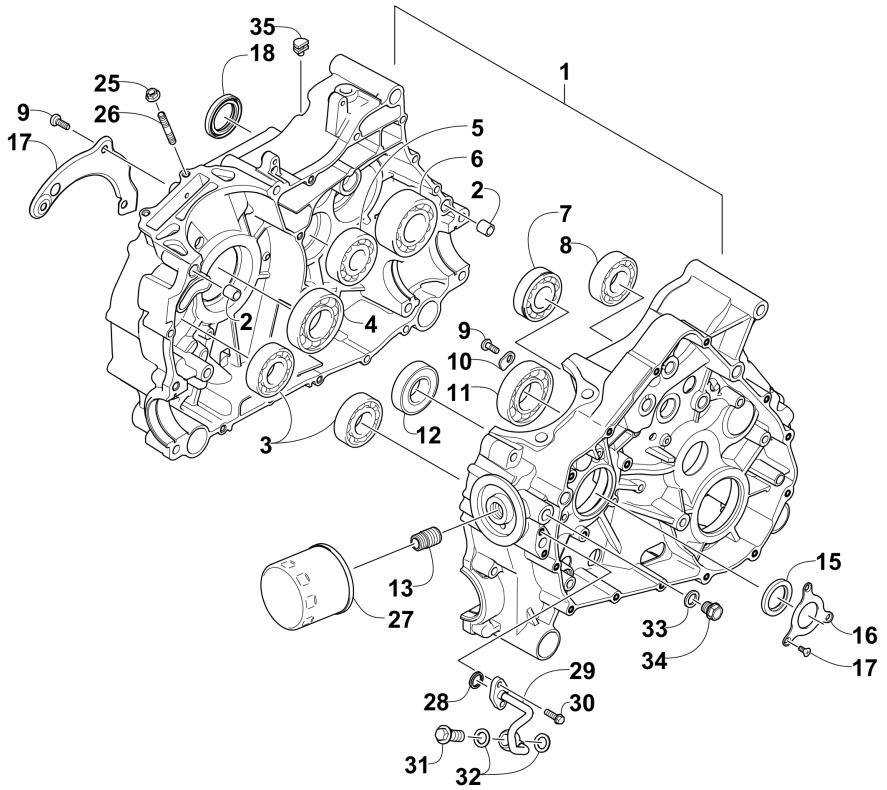

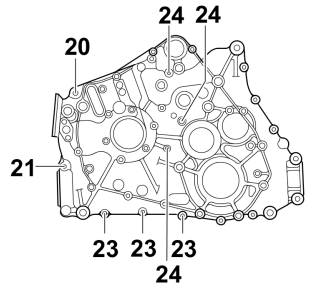

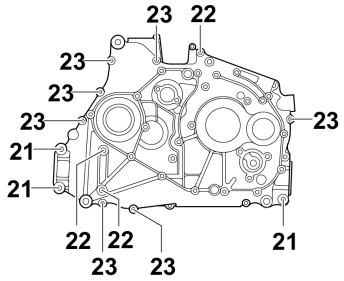

Item	Part No.	Qty	Name	Context	Footnote
1	0801-191	1	Crankcase - Assembly	(inc. 2-22)	
2	0829-050	2	Pin, Dowel		
3	3313-745	2	Bearing		
4	0832-087	1	Bearing		
5	3304-198	1	Bearing		
6	0832-074	1	Bearing		
7	3304-195	1	Bearing		
8	3304-699	1	Bearing, Ball - Radial		
9	0826-144	6	Screw, PPH - M6 x 1 x 12		
10	0822-104	2	Retainer, Bearing		
11	0832-019	1	Bearing		
12	0832-020	1	Bearing		
13	0812-066	1	Union, Oil Filter		
14	0830-058	1	Seal		
15	0805-018	1	Retainer		
16	0826-145	3	Screw, Machine		
17	0801-018	1	Plate, Oil Guide - Right		
18	0830-066	1	Seal		
19	0801-027	1	Tube, Vent - Crankcase		
20	3303-372	1	Screw, Cap		
21	0826-126	4	Screw, Cap		
22	0826-064	3	Screw, Cap		
23	3303-387	10	Screw, Cap		

Item	Part No.	Qty	Name	Context	Footnote
24	0826-065	3	Screw, Cap		
25	3304-654	2	Nut, Flange - 6 mm		
26	3313-721	2	Bolt, Stud		
27	0812-034	1	Filter, Oil		
28	0830-172	1	O-Ring		
29	0812-086	1	Oilline		
30	3303-617	2	Bolt, Flange		
31	0812-084	1	Bolt, Banjo-Fitting		
32	0812-085	2	Washer		
33	0830-143	1	Washer, Compression - 14 x 19 x 1.35		
34	0835-004	1	Plug, Oil Pressure		
35	3313-744	1	Grommet		

CRANKSHAFT AND PISTON ASSEMBLY [301452]

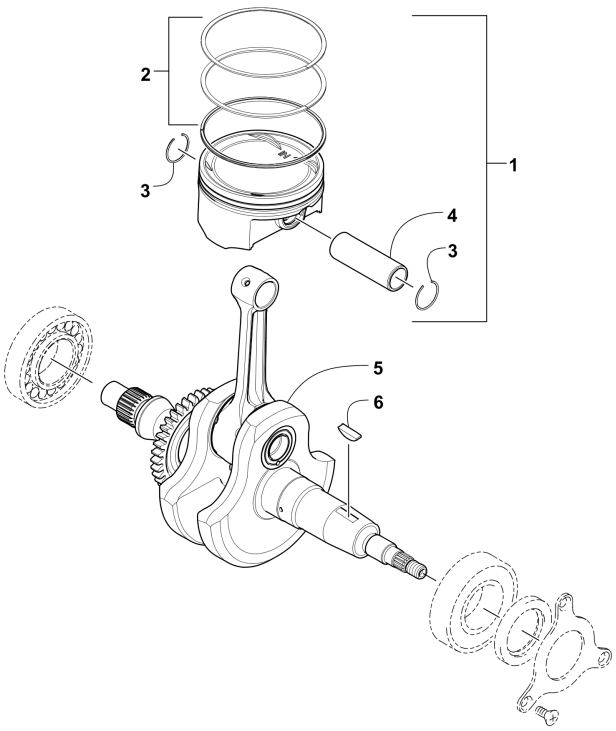

Item	Part No.	Qty	Name	Context	Footnote
1	0805-333	1	Piston Set	(inc. 2-4)	
2	0805-320	1	Ring, Piston - Set		
3	0831-060	2	Circlip		
4	0805-023	1	Pin, Piston		
5	0805-013	1	Crankshaft Assembly		
6	0829-039	1	Key		

CYLINDER ASSEMBLY [92762]

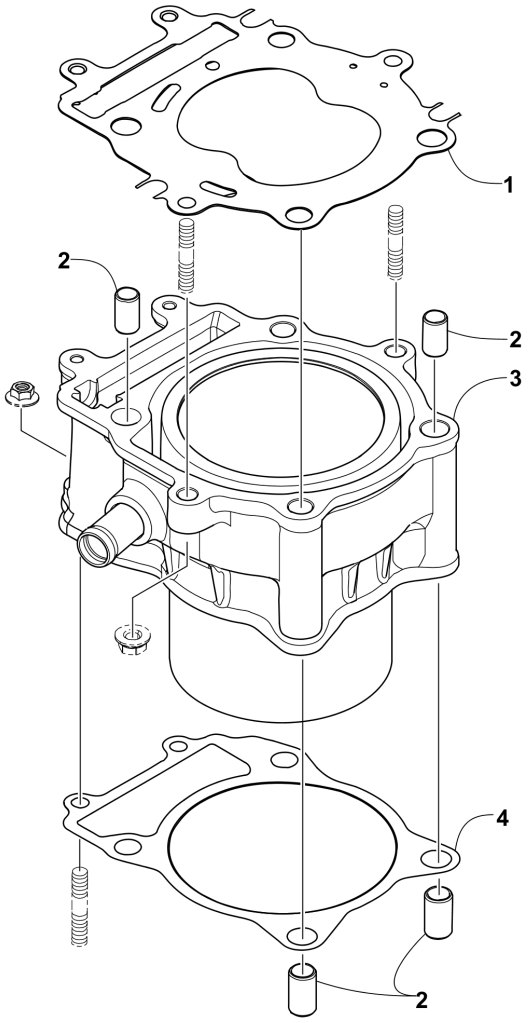

Item	Part No.	Qty	Name	Context	Footnote
1	0830-203	1	Gasket, Cylinder Head		
2	0829-046	4	Pin, Dowel		
3	0804-056	1	Cylinder		
4	0830-204	1	Gasket, Cylinder		

CYLINDER HEAD AND CAMSHAFT/VALVE ASSEMBLY [300571]

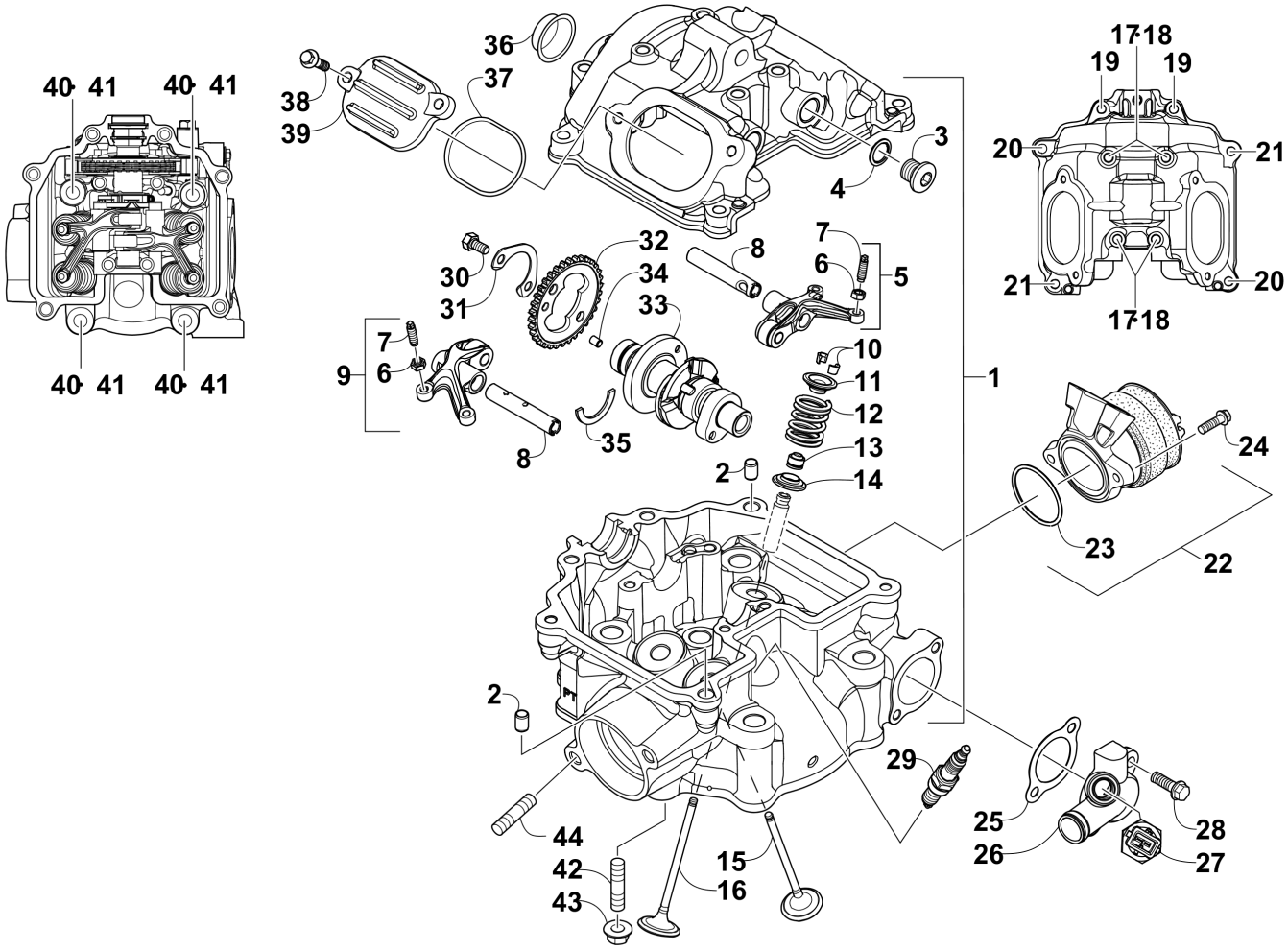

Item	Part No.	Qty	Name	Context	Footnote
1	0808-205	1	Head, Cylinder	(inc. 2-17)	
2	3303-341	2	Pin, Dowel		
3	0831-053	2	Plug, Shaft		
4	0830-143	2	Washer, Compression - 14 x 19 x 1.35		
5	0809-254	1	Arm, Valve Rocker - Intake	(inc. 6-7)	
6	3304-026	4	Nut, Tappet Adjusting		
7	3304-007	4	Screw, Tappet Adjusting		
8	0809-256	2	Shaft, Rocker Arm		
9	0809-252	1	Arm, Valve Rocker - Exhaust	(inc. 6-7)	
10	3303-044	8	Cotter, Valve		
11	0809-142	4	Retainer, Spring		
12	0809-257	4	Spring, Valve		
13	0809-190	4	Seal, Oil		
14	0809-141	4	Seat, Spring		
15	0809-266	2	Valve, Exhaust		
16	0809-263	2	Valve, Intake		
17	3304-904	4	Screw, Cap		
18	0830-155	4	Gasket		
19	3304-918	2	Screw, Cap		

Item	Part No.	Qty	Name	Context	Footnote
20	0826-136	2	Screw, Cap		
21	3303-384	2	Bolt, Flange		
22	3306-249	1	Manifold, Intake	(inc. 23)	
23	0830-202	1	O-Ring		
24	3304-189	2	Bolt, Flange		
25	0830-200	1	Gasket		
26	3306-246	1	Fitting, Coolant - Assembly		
27	0824-051	1	Sensor, Engine Coolant Temperature		
28	3303-617	2	Bolt, Flange		
29	0217-708	1	Plug, Spark	CR7E	
30	0826-154	2	Screw, Cap		
31	0828-086	1	Plate, Retainer		
32	0809-259	1	Sprocket		
33	3306-247	1	Camshaft	(inc. 34)	
34	0829-036	1	Pin, Alignment		
35	0809-165	1	C-Ring		
36	3306-787	1	Plug, Head		
37	0830-139	2	O-Ring		
38	3303-383	4	Bolt		
39	0808-111	2	Cap, Inspection		
40	0826-062	4	Screw, Cap		
41	0828-044	4	Washer		
42	0827-064	2	Bolt, Stud		
43	3304-668	2	Nut, Lock		
44	0827-065	2	Bolt, Stud		

DRIVE TRAIN ASSEMBLY [100713]

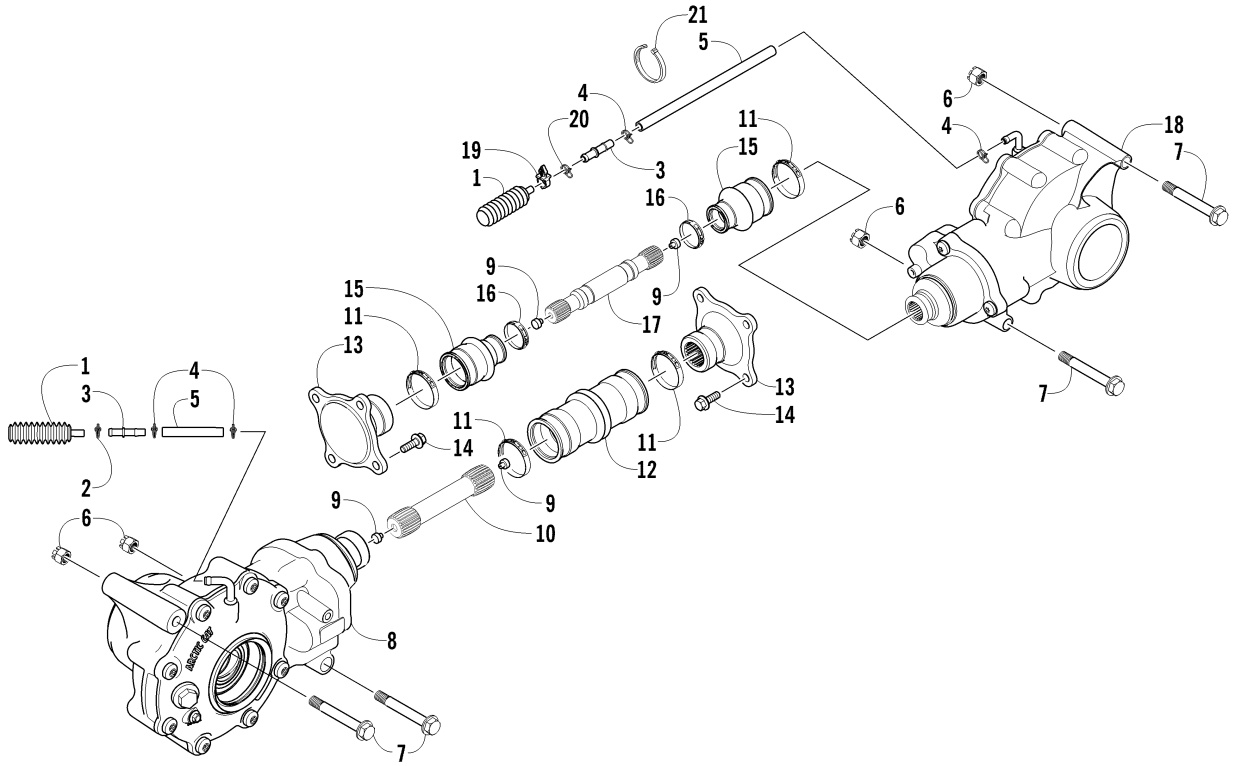

Item	Part No.	Qty	Name	Context	Footnote
1	3313-796	2	Bladder, Gearcase		
2	3323-149	1	Clamp, Hose		
3	3323-150	2	Fitting, Vent		
4	3313-684	4	Clamp, Hose		
5	0410-070	AR	Hose - 25 ft		
6	3304-031	4	U-Nut		
7	3305-787	4	Screw, Cap		
8	3306-265	1	Complete Front Drive Gearcase Assembly		
9	3313-783	4	Bumper, Propeller Shaft		
10	3313-784	1	Shaft, Propeller		
11	3313-776	4	Clamp		
12	3313-825	1	Boot, Coupler		
13	3313-774	2	Flange, Output		
14	3304-565	8	Bolt, Flange - 8 x 20		
15	0402-985	2	Boot		
16	3313-777	2	Clamp		
17	3313-773	1	Shaft, Propeller		
18	3306-023	1	Gearcase, Rear		
19	3323-152	1	Clip, Routing		
20	3303-349	1	Clamp, Hose		
21	0123-788	AR	Tie, Cable - 8 in.		

ENGINE AND EXHAUST [100493]

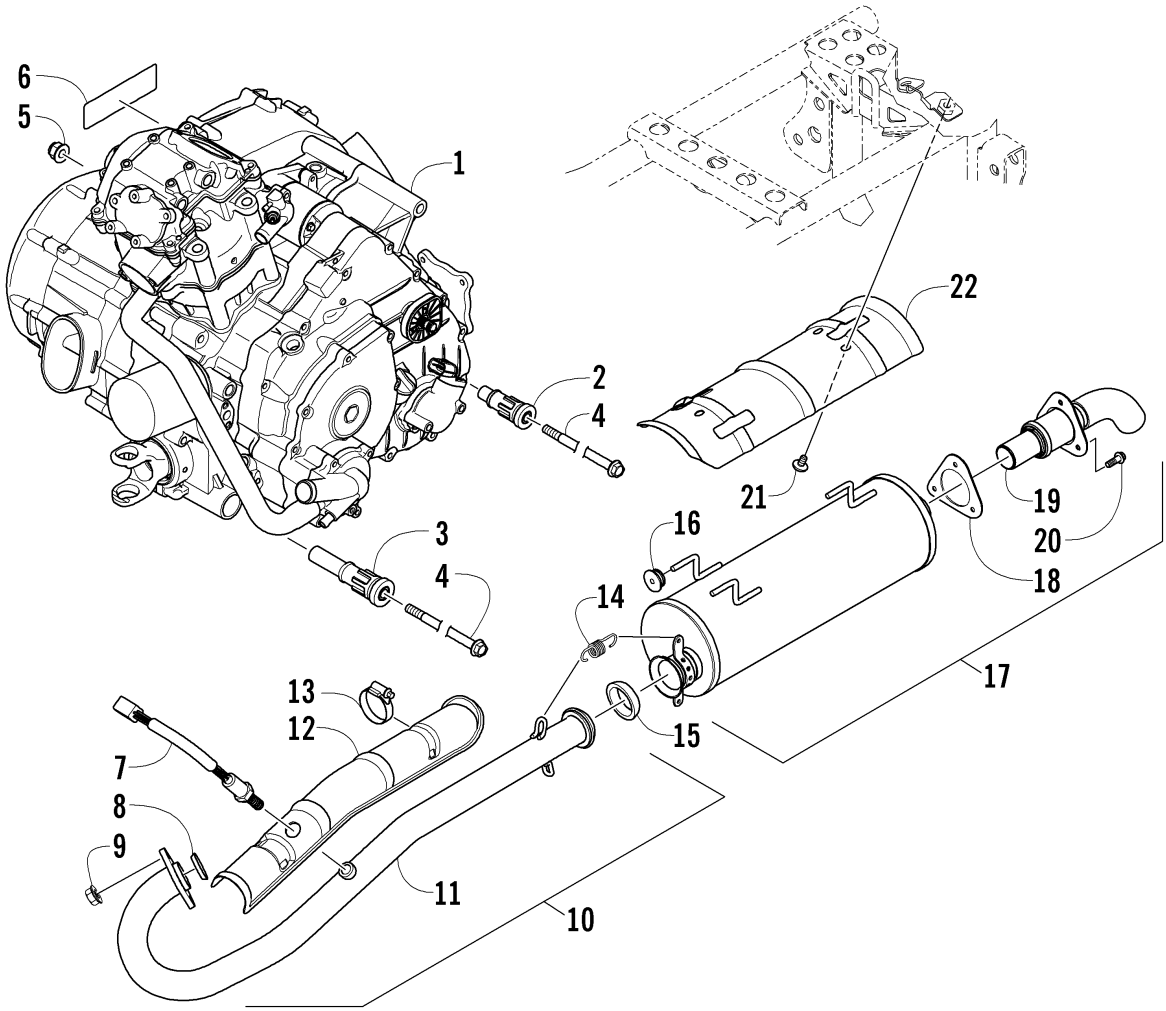

Item	Part No.	Qty	Name	Context	Footnote
1	3313-836	1	Engine, 450 KD - w/Rubber Mounts	(inc. 2-3)	
2	0801-188	3	Mount, Rubber - Engine		
3	0801-189	1	Mount, Rubber - Engine		
4	3323-174	2	Screw, Cap		
5	3304-031	2	U-Nut		
6	0411-426	1	Decal, Warning - Clutch		
7	3306-877	1	Sensor, Oxygen		
8	3313-743	1	Gasket, Exhaust Pipe		
9	3303-332	2	Nut		
10	3306-876	1	Pipe, Exhaust - Assembly	(inc. 11-13)	
11	3306-875	1	Pipe, Exhaust		
12	3306-874	1	Shield, Exhaust		
13	0423-317	2	Clamp		
14	0612-668	2	Spring, Extension		
15	3306-315	1	Seal, Exhaust		
16	3313-264	3	Bushing		
17	3306-551	1	Muffler - Assembly	(inc. 18-20)	
18	3313-708	1	Gasket, Spark Arrester		
19	3313-707	1	Arrester, Spark - Assembly		

Item	Part No.	Qty	Name	Context	Footnote
20	3313-710	3	Screw, Cap		
21	3313-711	3	Screw, Cap		
22	3313-026	1	Cover, Muffler		

FRAME AND RELATED PARTS [301444]

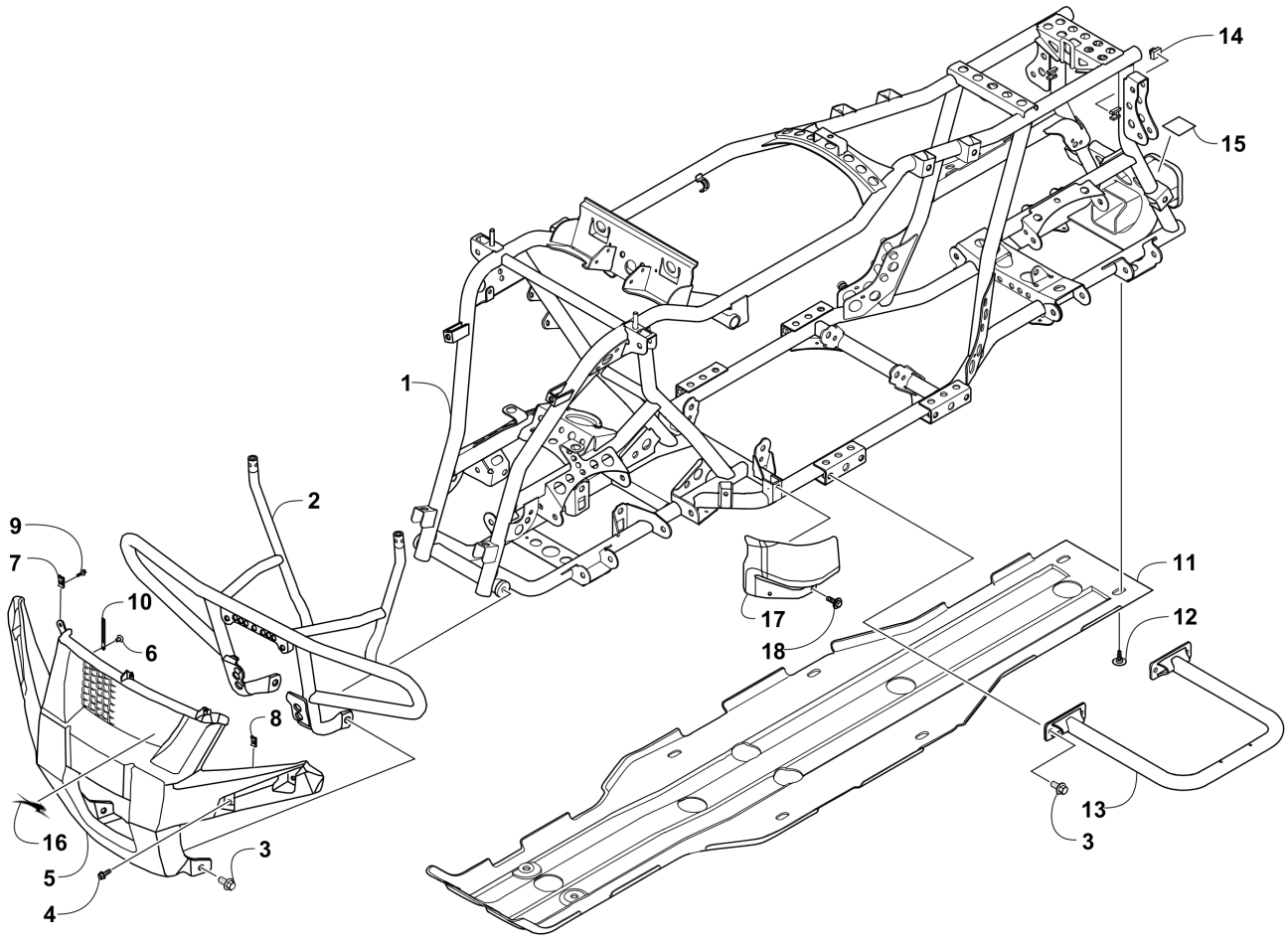

Item	Part No.	Qty	Name	Context	Footnote
1	3307-195	1	Frame, Main		
2	3307-186	1	Bumper - Front		
3	3304-543	12	Screw, Cap		
4	3304-587	6	Screw, Cap		
5	3307-145	1	Fascia, Bumper		
6	3304-586	2	Screw, Cap		
7	3303-267	4	Clip, U-Nut		
8	3304-061	4	Nut Clip 5 mm		
9	3304-029	5	Bolt, Washer - 5 x 16		
10	3304-157	2	Clamp, Routing		
11	3313-755	1	Plate, Skid		
12	0423-545	10	Screw, Shoulder		
13	3313-351	2	Footrest		
14	3306-329	2	Cushion		
15	1411-077	1	Decal, Warning - Towing		
16	4411-479	1	Decal, AirCat		
17	3313-844	1	Protector, Hose		
18	3305-783	2	Screw, Cap		

FRONT BODY, RACK, AND HEADLIGHT ASSEMBLY [301442]

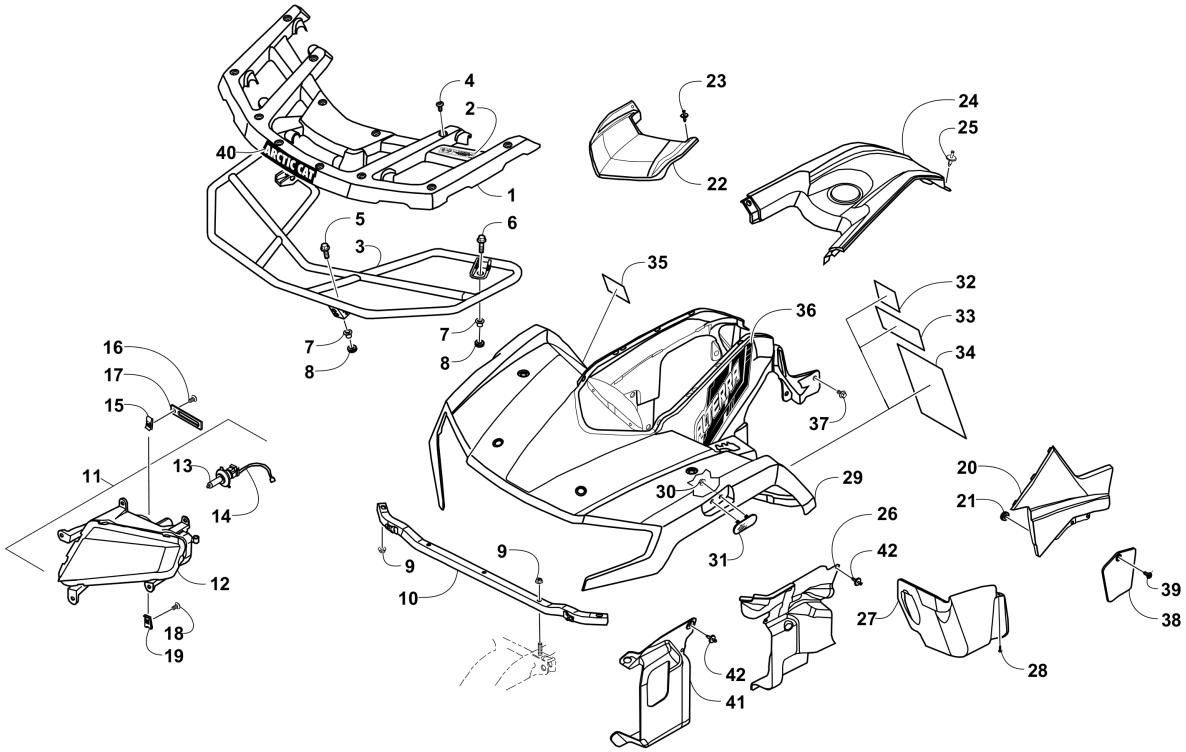

Item	Part No.	Qty	Name	Context	Footnote
1	3307-189	1	Panel, Front Rack - Assembly	(inc. 2)	
2	1411-681	1	Decal, Warning - Load		
3	3307-181	1	Rack, Front		
4	3304-650	12	Screw, Self-Tapping		
5	3313-522	2	Screw, Cap		
6	3313-713	2	Screw, Cap		
7	0423-669	4	Spacer		
8	0423-465	4	Grommet		
9	3304-668	4	Nut, Lock		
10	3307-196	1	Tube, Mounting		
11	3307-134	1	Headlight - Assembly - Right	(inc. 12-14)	
11	3307-135	1	Headlight - Assembly - Left	(inc. 12-14)	
12	3307-132	1	Lens, Headlight - Right		
12	3307-133	1	Lens, Headlight - Left		
13	3303-846	2	Bulb, Headlight		
14	3307-136	2	Socket, Headlight - Assembly		
15	3304-061	4	Nut Clip 5 mm		
16	3304-029	4	Bolt, Washer - 5 x 16		
17	3304-157	2	Clamp, Routing		
18	3307-137	2	Screw, Cap		
19	3303-267	2	Clip, U-Nut		
20	3307-162	1	Panel, Side - Lower - Right - Red		
20	3307-164	1	Panel, Side - Lower - Right - Green		

Item	Part No.	Qty	Name	Context	Footnote
20	3307-163	1	Panel, Side - Lower - Left - Red		
20	3307-165	1	Panel, Side - Lower - Left - Green		
21	0423-678	10	Grommet		
22	3307-146	1	Cover, Access		
23	3303-592	4	Clip, Retaining		
24	3307-139	1	Cover, Gas Tank		
25	3304-057	2	Clip, Fender		
26	3306-284	1	Panel, Splash - Rear Right		
26	3306-285	1	Panel, Splash - Rear Left		
27	3313-754	1	Shield, Linkage		
28	3304-650	15	Screw, Self-Tapping		
29	3307-141	1	Panel, Fender - Front - Red	(inc. 30-35)	
29	3307-143	1	Panel, Fender - Front - Green	(inc. 30-35)	
30	3304-774	2	Nut		
31	3313-359	2	Reflector - Front		
32	4411-818	1	Decal, Warning - Turn/Hill		
33	1411-804	1	Decal, Warning - Age (16)		
34	1411-932	1	Decal, Warning - General		
35	1411-574	1	Decal, Warning - Off-Road Only		
36	5411-384	1	Decal, Side - Upper Right - Red		
36	5411-385	1	Decal, Side - Upper Left - Red		
36	5411-380	1	Decal, Side - Upper Right - Green		
36	5411-381	1	Decal, Side - Upper Left - Green		
37	3305-783	2	Screw, Cap		
38	3307-169	1	Panel, Access		
39	3303-592	1	Clip, Retaining		
40	5411-392	1	Decal, Arctic Cat		
41	3306-286	1	Panel, Splash - Front Right		
41	3306-287	1	Panel, Splash - Front Left		
42	3305-448	4	Clip, Retaining		

FRONT DRIVE GEARCASE ASSEMBLY [301367]

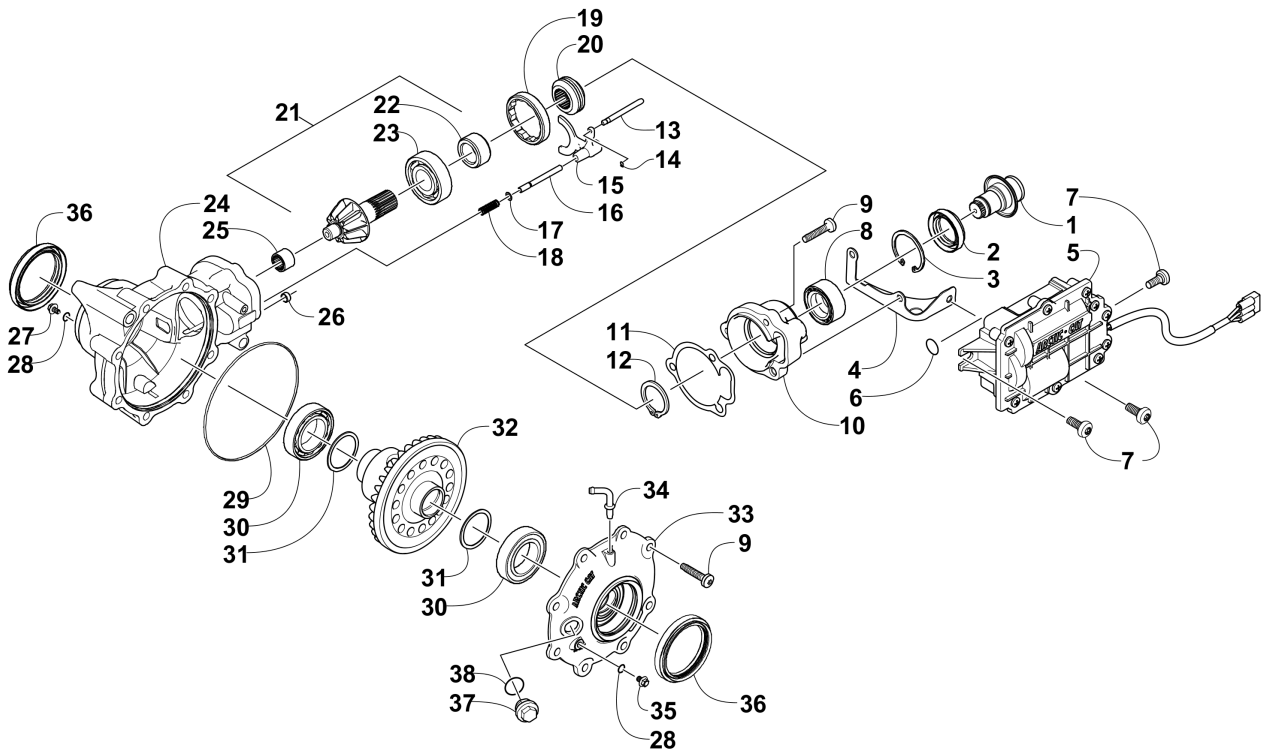

Item	Part No.	Qty	Name	Context	Footnote
-	3306-265	1	Complete Front Drive Gearcase Assembly		
1	3306-047	1	Shaft, Input		
2	3323-239	1	Seal		
3	3306-046	1	Ring, Retaining		
4	3323-241	1	Bracket, Actuator		
5	3306-264	1	Actuator		
6	3313-792	1	O-Ring		
7	3313-797	3	Screw, Self-Tapping		
8	3323-240	1	Bearing		
9	3305-513	11	Bolt, Flange		
10	3323-238	1	Housing, Pinion		
11	3323-234	1	Gasket, Flange		
12	3306-045	1	Ring, Retaining		
13	3323-235	1	Shaft, Selector		
14	3313-791	1	Ring, Retaining		
15	3323-236	1	Fork, Selector		
16	3323-233	1	Shaft, Shuttle		
17	3313-790	1	O-Ring		
18	3313-789	1	Spring, Return		
19	3313-788	1	Collar, Lock		
20	3323-232	1	Coupler, Drive		
21	3306-039	1	Gear, Pinion - Assembly - 11T	(inc. 22-23)	
22	0402-336	1	Collar, Retaining		

Item	Part No.	Qty	Name	Context	Footnote
23	3306-040	1	Bearing		
24	3313-793	1	Housing, Gearcase		
25	3306-038	1	Bearing		
26	3306-048	1	Pin, Dowel		
27	3306-027	1	Plug, Magnetic	(inc. one No. 28)	
28	0423-153	2	O-Ring		
29	3306-030	1	O-Ring		
30	3306-801	2	Bearing		
31	3306-132	AR	Shim, 41 x 49 x 1.0 mm		
31	3306-133	AR	Shim, 41 x 49 x 1.1 mm		
31	3306-134	AR	Shim, 41 x 49 x 1.2 mm		
31	3306-135	AR	Shim, 41 x 49 x 1.3 mm		
31	3306-136	AR	Shim, 41 x 49 x 1.4 mm		
31	3306-137	AR	Shim, 41 x 49 x 1.5 mm		
31	3306-138	AR	Shim, 41 x 49 x 1.6 mm		
31	3306-139	AR	Shim, 41 x 49 x 1.7 mm		
32	3313-794	1	Gear, Ring - 34T		
33	3313-795	1	Cover, Gearcase		
34	3306-034	1	Fitting, Elbow		
35	3306-036	1	Plug, Oil Level	(inc. one No. 28)	
36	3306-025	2	Seal		
37	3306-035	1	Plug, Fill	(inc. 38)	
38	0423-154	1	O-Ring		

FRONT SUSPENSION ASSEMBLY [300467]

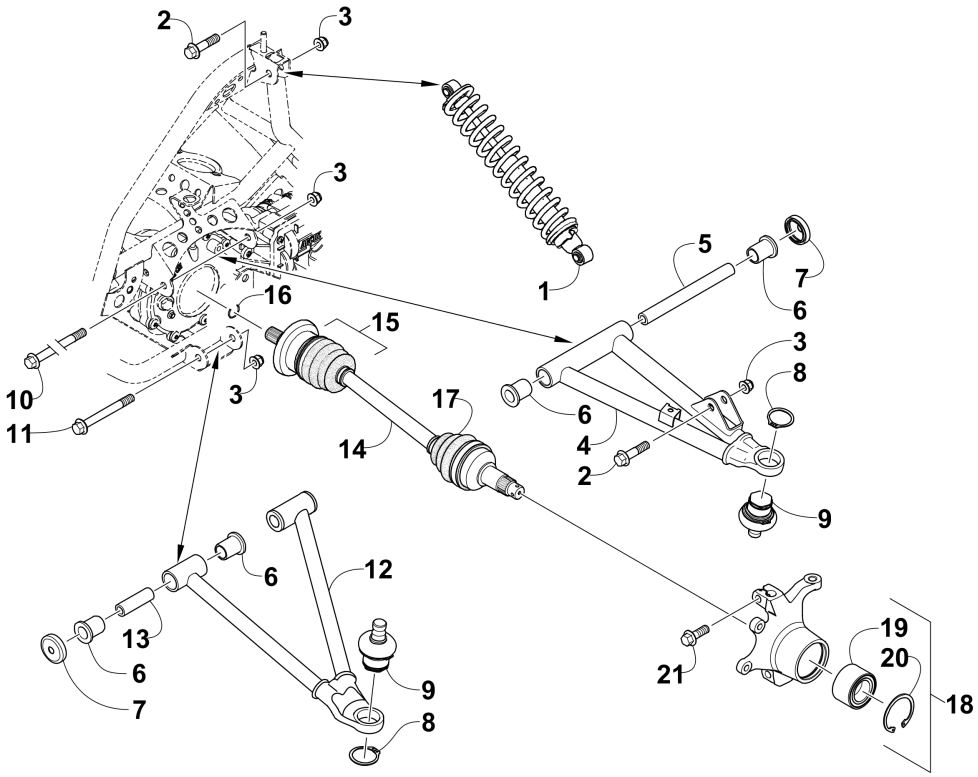

Item	Part No.	Qty	Name	Context	Footnote
1	3306-865	2	Shock/Spring Assembly - Black		
2	3307-068	4	Screw, Cap		
3	3304-031	10	U-Nut		
4	3306-866	1	A-Arm, Upper Right - Black	(inc. 5-9)	
4	3306-867	1	A-Arm, Upper Left - Black	(inc. 5-9)	
5	3313-111	2	Sleeve, Suspension		
6	3313-112	12	Bushing		
7	3313-113	12	Seal		
8	0423-009	4	Clip, Ball Joint		
9	0405-483	4	Ball Joint		
10	3313-430	2	Screw, Cap		
11	3304-183	4	Screw, Cap		
12	3313-082	1	A-Arm, Lower Right - Black	(inc. 6-9 and 13)	
12	3313-083	1	A-Arm, Lower Left - Black	(inc. 6-9 and 13)	
13	3313-107	4	Axle		
14	3313-831	2	Halfshaft, Front	(inc. 15-17)	
15	3313-560	2	Service Kit, Differential Side Boot (In Board)	(inc. 16)	
16	0423-844	2	Clip, Retaining - Inboard		
17	3306-425	2	Repair Kit, Boot - Drive Axle - Outbound		
18	3323-130	1	Knuckle - Assembly - Right	(inc. 19-20)	
18	3323-131	1	Knuckle - Assembly - Left	(inc. 19-20)	
19	1402-809	2	Bearing		
20	0423-423	2	Ring, Retaining		

Item	Part No.	Qty	Name	Context	Footnote
21	3323-127	4	Screw, Cap		

GAS TANK ASSEMBLY [300568]

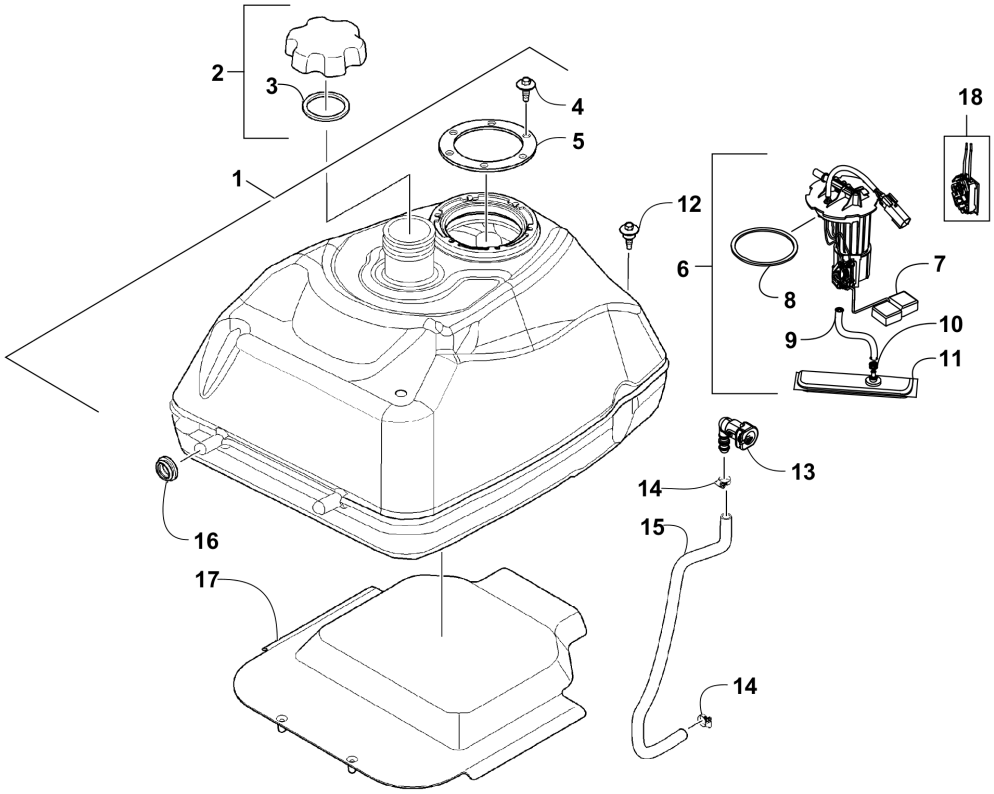

Item	Part No.	Qty	Name	Context	Footnote
1	3306-403	1	Tank, Fuel - Assembly	(inc. 2-5)	
2	3306-297	1	Cap, Gas Tank	(inc. 3)	
3	3306-298	1	Gasket, Gas Tank Cap		
4	3306-300	6	Bolt, Washer - 5 x 16		
5	3306-299	1	Plate, Retaining		
6	3307-076	1	Pump, Fuel - Assembly	(inc. 7-11)	
7	2670-235	1	Float		
8	3313-845	1	Seal		
9	3307-080	1	Tube, Filter		
10	3307-079	1	Clip		
11	3307-077	1	Fuel Filter		
12	0423-732	1	Screw, Shoulder		
13	1670-878	1	Fitting, Quick-Connect		
14	0623-373	2	Clamp, Hose		
15	3307-078	1	Hose, Fuel - Assembly		
16	0423-460	2	Grommet		
17	3313-833	1	Shield, Heat		

GEAR SHIFTING ASSEMBLY [94326]

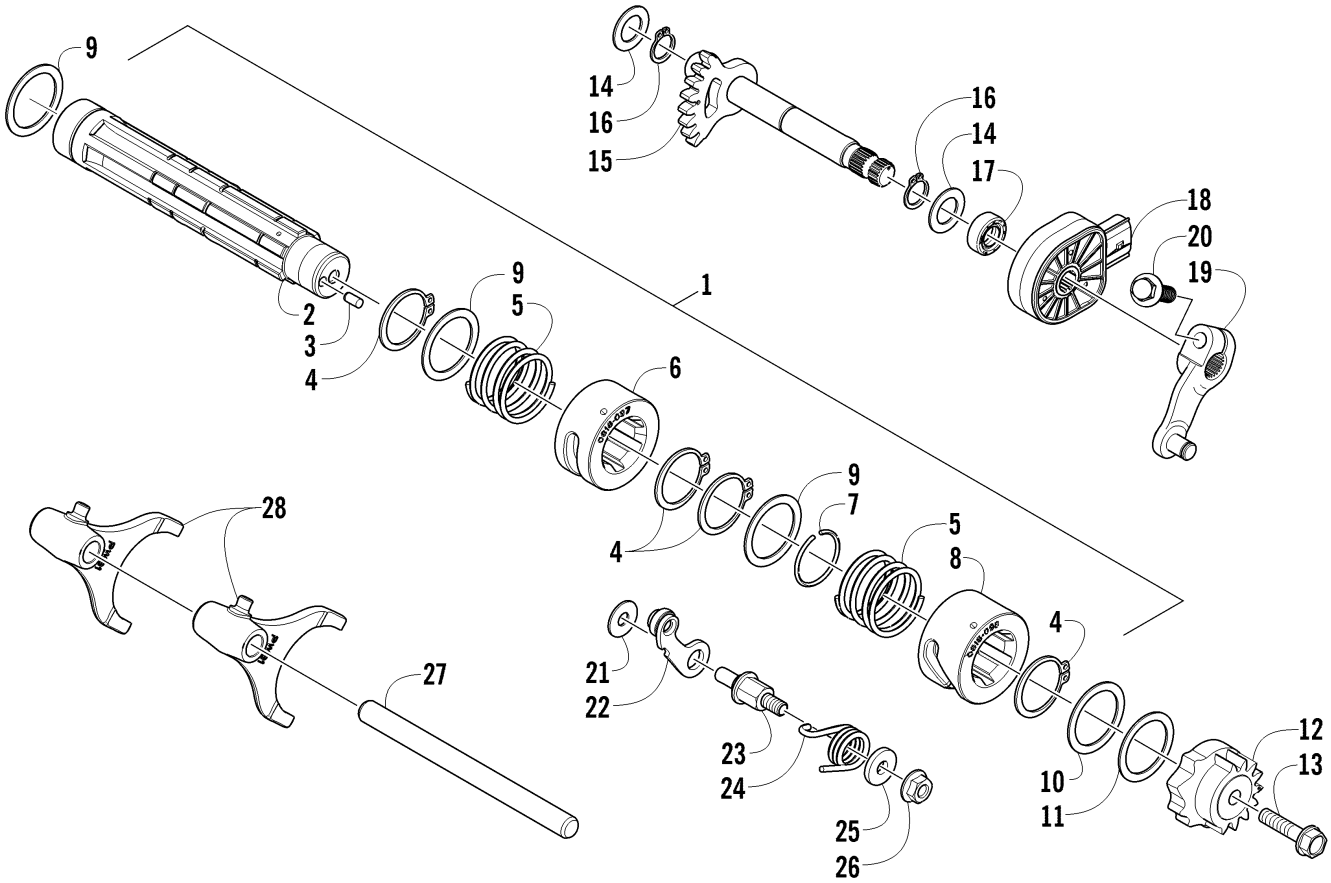

Item	Part No.	Qty	Name	Context	Footnote
1	0818-126	1	Drum, Gear Shift - Assembly	(inc. 2-8 and two No. 9)	
2	0818-125	1	Shaft, Shift		
3	3304-439	1	Pin, Dowel		
4	3304-147	4	Circlip, External - 25 mm		
5	0818-060	2	Spring		
6	0818-117	1	Cam, Gear Shift		
7	0831-016	1	C-Ring		
8	0818-116	1	Cam, Reverse		
9	0828-079	3	Washer		
10	0828-081	1	Washer, Thrust		
11	0828-080	1	Washer, Thrust		
12	0818-061	1	Plate, Gear Shift Cam		
13	3304-569	1	Screw, Cap		
14	0828-084	2	Washer		
15	0818-113	1	Shaft, Sub-Gear Shift	(inc. 16)	
16	0831-056	2	Ring, Retaining		
17	0830-179	1	Seal		
18	3306-259	1	Switch, Gear Position		
19	3306-316	1	Arm, Select		

Item	Part No.	Qty	Name	Context	Footnote
20	3304-551	1	Bolt, Flange - 6 x 22		
21	0828-083	1	Washer		
22	0818-084	1	Stopper, Cam		
23	0818-062	1	Support, Cam Stopper		
24	0818-109	1	Spring		
25	0828-082	1	Washer		
26	3304-654	1	Nut, Flange - 6 mm		
27	0818-021	1	Shaft, Shift Fork		
28	0818-088	2	Fork, Shift		

HANDLEBAR ASSEMBLY [301445]

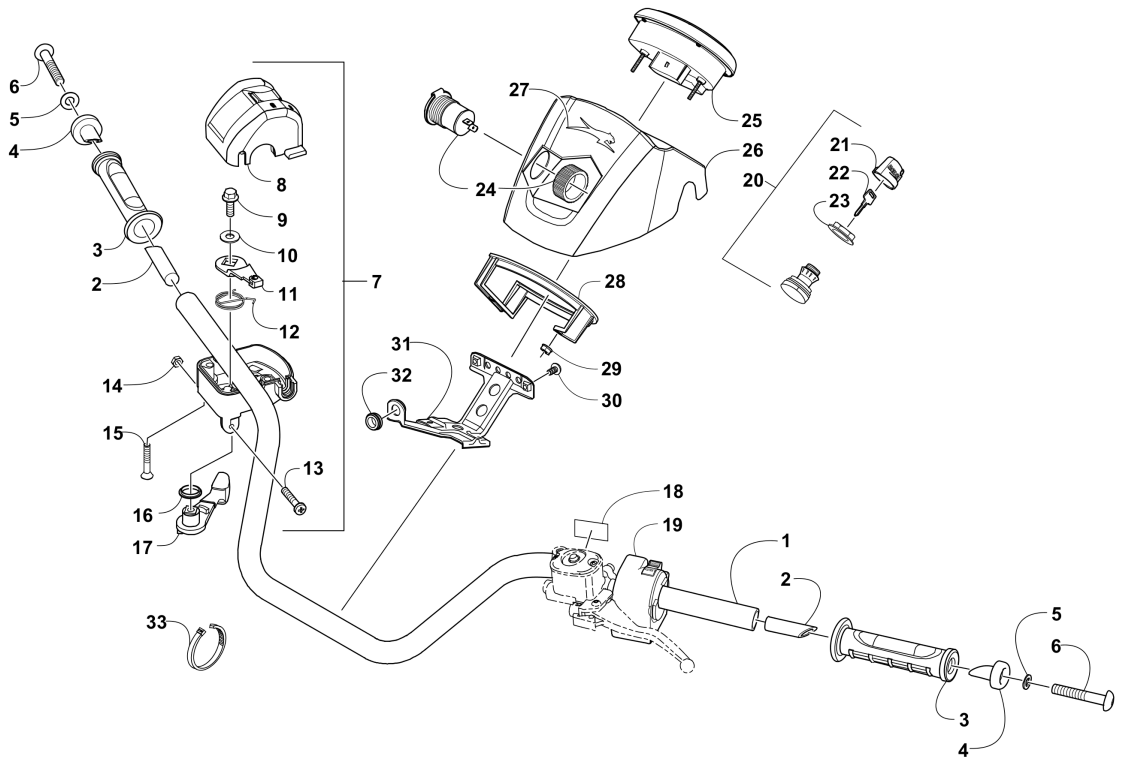

Item	Part No.	Qty	Name	Context	Footnote
1	3313-059	1	Handlebar		
2	0405-148	2	Plug, Handlebar		
3	0405-147	2	Grip, Handlebar		
4	0405-149	2	End Cap, Handlebar		
5	8050-247	2	Washer		
6	8477-845	2	Screw, Machine		
7	3306-276	1	Case, Throttle - Assembly		
8	0	1	Cover, Throttle Case w/Switch		Not Serviced Individually
9	3305-344	1	Screw, Cap		
10	3313-739	1	Washer		
11	3313-838	1	Arm, Throttle		
12	3313-839	1	Spring		
13	3313-740	1	Screw, Machine		
14	3305-832	1	Nut		
15	3313-741	2	Screw, Machine		
16	3313-841	2	Seal		
17	3313-842	1	Lever		
18	1411-865	1	Decal, Brake Lever Lock		
19	3313-428	1	Control, Left - w/Override		
20	3313-439	1	Switch, Ignition - Assembly	(inc. 21-23)	
21	0430-054	1	Cover, Key		
22	3409-007	2	Key, Blank (C Series)		

Item	Part No.	Qty	Name	Context	Footnote
23	0430-050	1	Nut, Retaining		
24	3313-468	1	Outlet, Accessory - 12V		
25	0520-294	1	Speedometer - Assembly		
26	3307-138	1	Pod, Instrument		
27	4411-479	1	Decal, AirCat		
28	0420-065	1	Bracket, Retaining		
29	0423-493	2	Nut w/Washer		
30	3304-404	2	Screw, Cap		
31	3306-277	1	Bracket, Mounting - Pod	(inc. 32)	
32	3303-239	1	Grommet		
33	3303-839	AR	Tie, Cable		

HYDRAULIC BRAKE ASSEMBLY [301447]

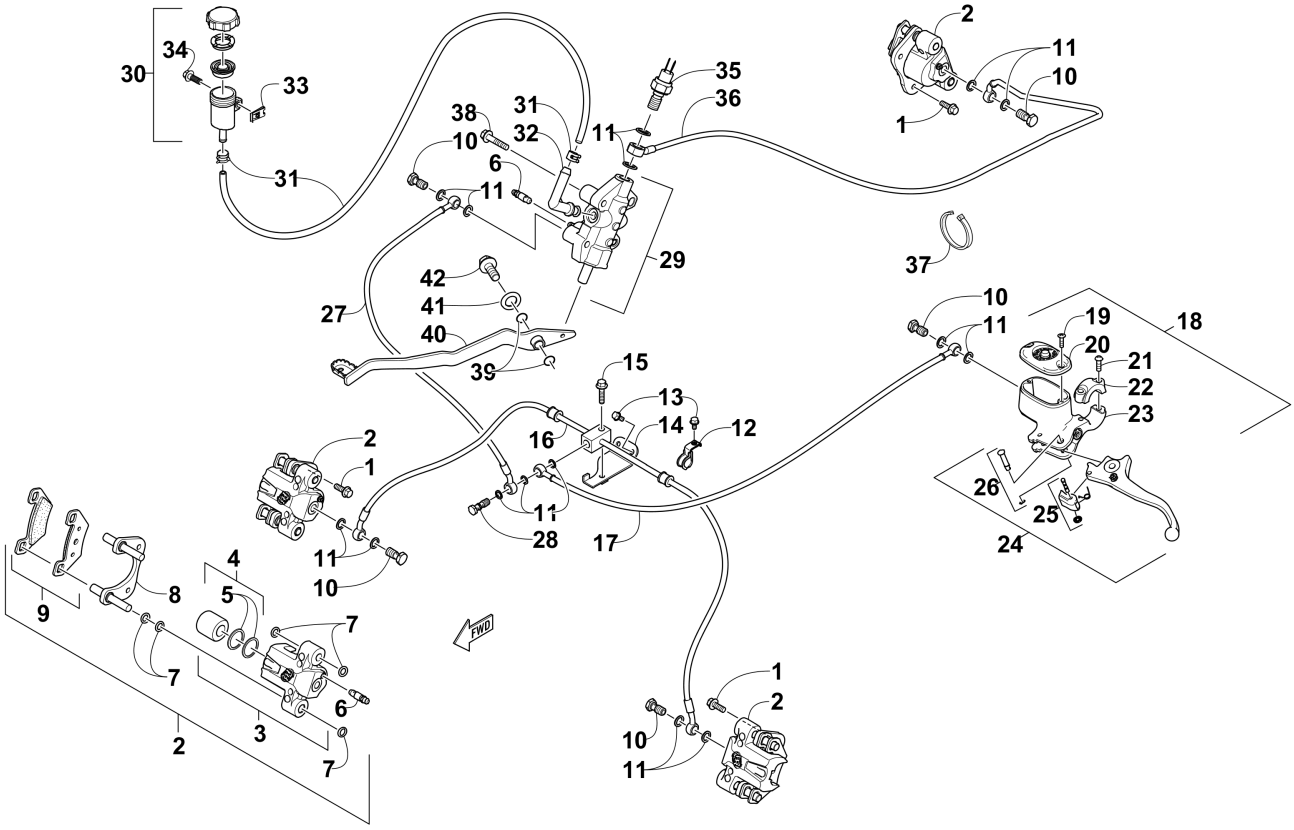

Item	Part No.	Qty	Name	Context	Footnote
1	3307-069	6	Screw, Cap		
2	3323-230	1	Caliper, Brake	(inc. 3-9)	Right Front
2	3323-231	1	Caliper, Brake	(inc. 3-9)	Front Left &Rear Right
3	1436-160	1	Housing, Caliper - Assembly	(inc. 4-6)	Right Front
3	1436-161	1	Housing, Caliper - Assembly	(inc. 4-6)	Front Left &Rear Right
4	0502-606	3	Piston/Seal Set	(inc. 5)	
5	0502-607	3	Seal Set		
6	0502-609	4	Valve, Bleed		
7	0502-608	3	O-Ring, Guide - Set		
8	0502-605	3	Bracket Assembly		
9	1436-420	3	Pad, Brake - Set		
10	3307-067	5	Bolt, Banjo-Fitting		
11	3303-284	15	Washer, Crush		
12	3303-919	2	Clamp, Brake Hose		
13	3304-553	3	Bolt, Flange - 6 x 12		
14	3313-523	1	Bracket, Mounting - Brake Hose Assembly		
15	3305-789	1	Screw, Cap		
16	3313-750	1	Hose (Junction), Brake - Assembly		
17	3313-422	1	Hose, Brake		
18	3313-316	1	Cylinder, Master Brake - Assembly	(inc. 19-26)	
19	0502-566	2	Screw, Machine		
20	0502-868	1	Cover, Reservoir		

Item	Part No.	Qty	Name	Context	Footnote
21	0502-568	2	Screw, Machine		
22	0502-869	1	Clamp, Handlebar		
23	0502-704	1	Master Cylinder Assembly		
24	1502-904	1	Lever Assembly - Kit	(inc. 25-26)	
25	1502-905	1	Lock, Brake Lever - Kit		
26	0502-580	1	Lever Pin - Kit		
27	3313-423	1	Hose, Brake		
28	3304-674	1	Bolt, Oil - 10 x 33		
29	3313-478	1	Brake Assembly	(inc. 30-32)	
30	1502-141	1	Reservoir, Brake - w/Clamp		
31	3313-489	1	Hose, Brake Fluid Reservoir - w/Clamps		
32	1502-296	1	Hose Adapter Spout, 90-Degree - Grommet Seal		
33	3304-061	1	Nut Clip 5 mm		
34	3306-146	1	Screw, Cap		
35	3313-820	1	Switch, Brake		
36	3313-315	1	Hose, Brake		
37	0123-788	AR	Tie, Cable - 8 in.		
38	3303-386	2	Bolt, Flange		
39	1602-213	2	O-Ring		
40	3313-156	1	Lever, Brake - Black		
41	3304-138	1	Washer		
42	3304-543	1	Screw, Cap		

MAGNETO ASSEMBLY [301458]

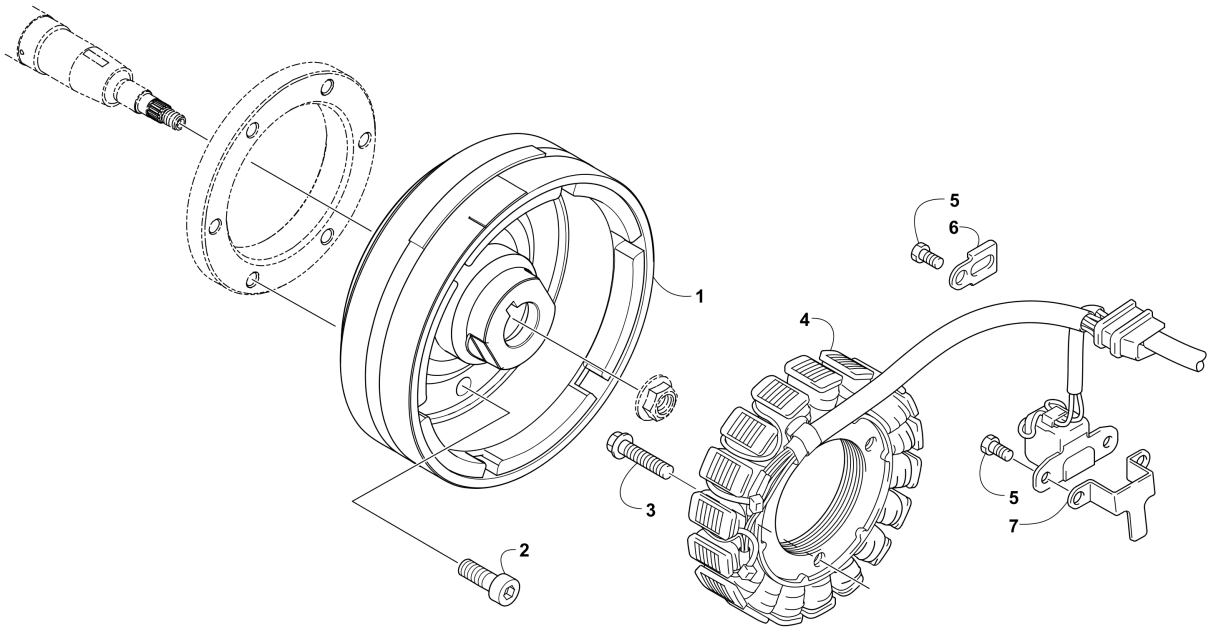

Item	Part No.	Qty	Name	Context	Footnote
1	0802-057	1	Rotor/Flywheel		
2	0826-120	6	Screw, Cap		
3	3307-116	3	Screw, Cap		
4	3323-200	1	Stator, Ignition		
5	3307-059	3	Screw, Cap		
6	0802-003	1	Clamp, Routing		
7	0802-004	1	Clamp, Routing		

OIL PUMP AND STRAINER ASSEMBLY [301455]

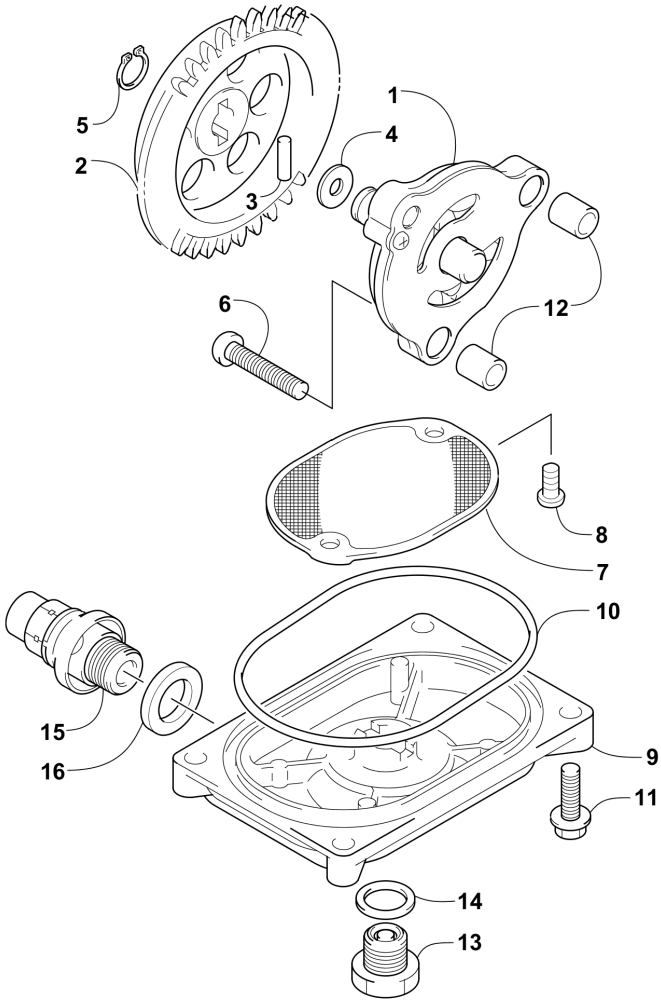

Item	Part No.	Qty	Name	Context	Footnote
1	0812-069	1	Pump, Oil		
2	0812-010	1	Gear, Driven		
3	0812-036	1	Pin, Driven Gear		
4	0828-007	1	Washer		
5	3304-146	1	Ring, Retaining		
6	3307-063	3	Screw, Machine		
7	0812-049	1	Strainer, Oil		
8	3307-047	2	Screw, Cap		
9	0812-038	1	Cap, Oil Strainer		
10	0830-159	1	O-Ring		
11	3307-050	4	Screw, Cap		
12	0829-033	2	Pin, Dowel		
13	0812-065	1	Plug, Drain		
14	0830-143	1	Washer, Compression - 14 x 19 x 1.35		
15	0812-067	1	Valve, Oil-Relief - Assembly	(inc. 16)	
16	0830-181	1	O-Ring		

REAR BODY, RACK, AND TAILLIGHT ASSEMBLY [301443]

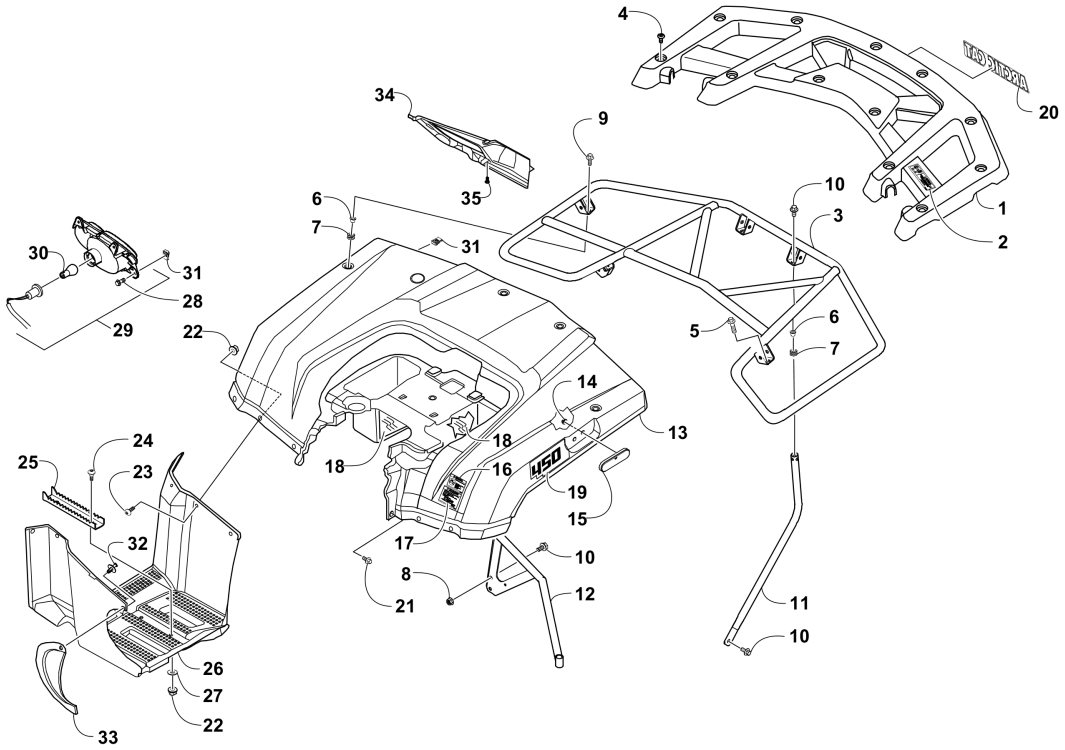

Item	Part No.	Qty	Name	Context	Footnote
1	3307-190	1	Panel, Rack - Rear - Assembly	(inc. 2)	
2	1411-682	1	Decal, Warning - Load		
3	3307-183	1	Rack, Rear		
4	3304-650	12	Screw, Self-Tapping		
5	8410-830	2	Screw, Cap		
6	0423-669	4	Spacer		
7	0423-465	4	Grommet		
8	3304-668	8	Nut, Lock		
9	3313-522	2	Screw, Cap		
10	3304-543	8	Screw, Cap		
11	3307-184	2	Tube, Mounting		
12	3307-185	1	Bracket, Mounting - Rear Rack		
13	3307-154	1	Panel, Fender - Rear - Red	(inc. 14-18)	
13	3307-156	1	Panel, Fender - Rear - Green	(inc. 14-18)	
14	3304-774	2	Nut		
15	3313-360	2	Reflector - Rear		
16	1411-809	1	Decal, Warning - Passenger		
17	1411-893	1	Decal, Warning - Tire Pressure		
18	3307-158	1	Foil, Protective - Right		
18	3307-159	1	Foil, Protective - Left		
19	5411-390	1	Decal, "450" - Right - Red		
19	5411-388	1	Decal, "450" - Right - Green		
19	5411-391	1	Decal, "450" - Left - Red		

Item	Part No.	Qty	Name	Context	Footnote
19	5411-389	1	Decal, "450" - Left - Green		
20	5411-392	1	Decal, Arctic Cat		
21	3305-783	2	Screw, Cap		
22	3304-431	22	Nut, Lock		
23	3305-703	18	Screw, Machine		
24	3304-586	4	Screw, Cap		
25	5506-497	2	Footpeg - Black		
26	3307-160	1	Footwell - Rear - Right		
26	3307-161	1	Footwell - Rear - Left		
27	3305-852	4	Washer		
28	3304-029	8	Bolt, Washer - 5 x 16		
29	3307-176	1	Taillight Assembly - Right	(inc. 30)	
29	3307-177	1	Taillight Assembly - Left	(inc. 30)	
30	3303-849	2	Bulb, Taillight		
31	3304-061	20	Nut Clip 5 mm		
32	3305-448	1	Clip, Retaining		
33	3307-168	1	Panel		
34	3307-166	1	Cover, Taillight - Right		
34	3307-167	1	Cover, Taillight - Left		
35	3304-645	8	Screw, Self-Tapping - 5 x 12		

REAR DRIVE GEARCASE ASSEMBLY [97672]

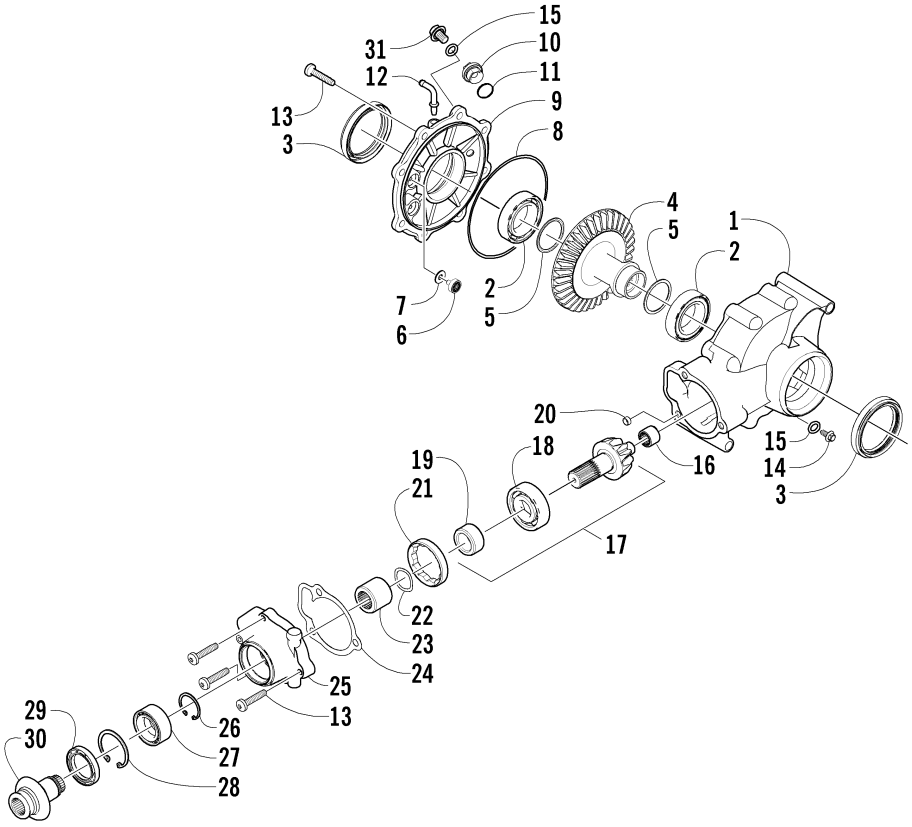

Item	Part No.	Qty	Name	Context	Footnote
Not Shown	3306-023	1	Gearcase, Rear		
1	3306-024	1	Housing, Gearcase		
2	3306-801	2	Bearing		
3	3306-025	2	Seal		
4	3306-029	1	Gear, Ring - 34T		
5	3306-132	AR	Shim, 41 x 49 x 1.0 mm		
5	3306-133	AR	Shim, 41 x 49 x 1.1 mm		
5	3306-134	AR	Shim, 41 x 49 x 1.2 mm		
5	3306-135	AR	Shim, 41 x 49 x 1.3 mm		
5	3306-136	AR	Shim, 41 x 49 x 1.4 mm		
5	3306-137	AR	Shim, 41 x 49 x 1.5 mm		
5	3306-138	AR	Shim, 41 x 49 x 1.6 mm		
5	3306-139	AR	Shim, 41 x 49 x 1.7 mm		
6	3306-031	1	Button, Thrust		
7	3306-124	AR	Shim, 6.3 x 18 x 1.0 mm		
7	3306-125	AR	Shim, 6.3 x 18 x 1.1 mm		
7	3306-126	AR	Shim, 6.3 x 18 x 1.2 mm		
7	3306-127	AR	Shim, 6.3 x 18 x 1.3 mm		
7	3306-128	AR	Shim, 6.3 x 18 x 1.4 mm		
7	3306-129	AR	Shim, 6.3 x 18 x 1.5 mm		
7	3306-130	AR	Shim, 6.3 x 18 x 1.6 mm		
7	3306-131	AR	Shim, 6.3 x 18 x 1.7 mm		
8	3306-030	1	O-Ring		

Item	Part No.	Qty	Name	Context	Footnote
9	3306-033	1	Cover, Gearcase		
10	3306-035	1	Plug, Fill	(inc. 11)	
11	0423-154	1	O-Ring		
12	3306-034	1	Fitting, Elbow		
13	3303-615	11	Screw, Self-Tapping		
14	3306-027	1	Plug, Magnetic	(inc. one No. 15)	
15	0423-153	2	O-Ring		
16	3306-038	1	Bearing		
17	3306-039	1	Gear, Pinion - Assembly - 11T	(inc. 18-19)	
18	3306-040	1	Bearing		
19	0402-336	1	Collar, Retaining		
20	3306-048	1	Pin, Dowel		
21	3306-042	1	Collar, Lock		
22	3306-043	1	Washer, Wave		
23	3306-044	1	Collar, Shaft		
24	3323-234	1	Gasket, Flange		
25	3306-049	1	Housing, Pinion		
26	3306-045	1	Ring, Retaining		
27	3323-240	1	Bearing		
28	3306-046	1	Ring, Retaining		
29	3323-239	1	Seal		
30	3306-047	1	Shaft, Input		
31	3306-036	1	Plug, Oil Level	(inc. one No. 15)	

REAR SUSPENSION ASSEMBLY [300468]

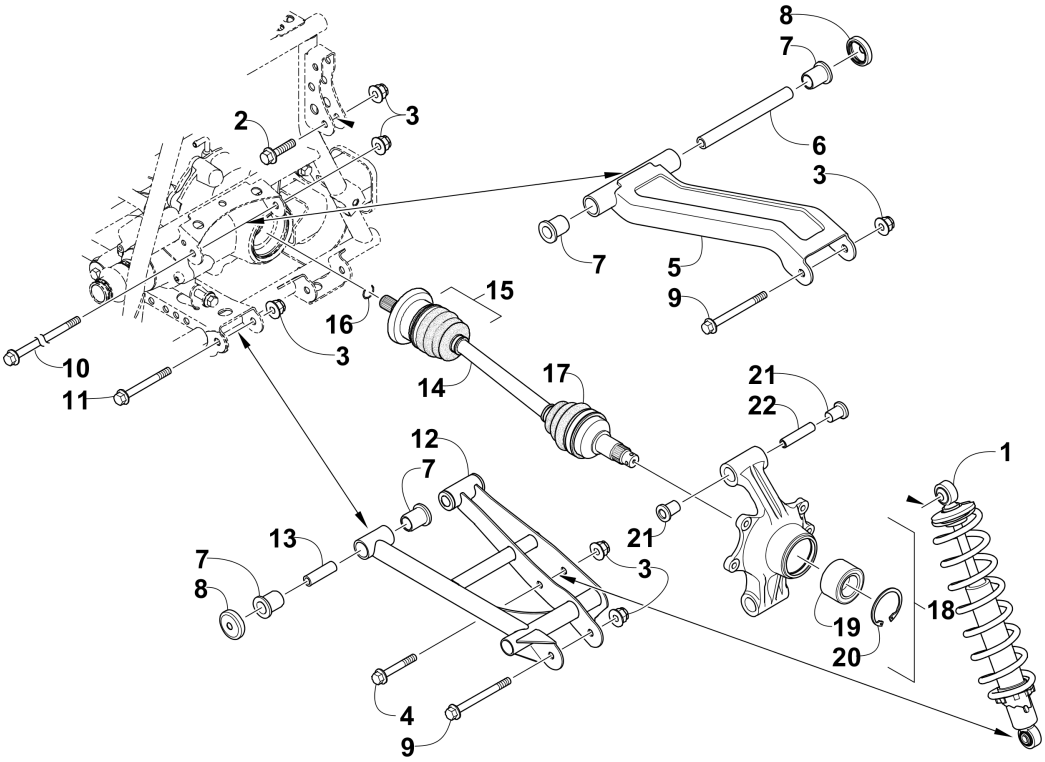

Item	Part No.	Qty	Name	Context	Footnote
1	3313-150	2	Shock/Spring Assembly - Black		
2	3307-068	2	Screw, Cap		
3	3304-031	14	U-Nut		
4	3307-070	2	Screw, Cap		
5	3306-872	1	A-Arm, Upper Right - Black	(inc. 6-8)	
5	3306-873	1	A-Arm, Upper Left - Black	(inc. 6-8)	
6	3313-111	2	Sleeve, Suspension		
7	3313-112	12	Bushing		
8	3313-113	12	Seal		
9	3323-188	4	Screw, Cap		
10	3313-430	2	Screw, Cap		
11	3304-183	4	Screw, Cap		
12	3313-136	1	A-Arm, Lower Right - Black	(inc. 7-8 and 13)	
12	3313-137	1	A-Arm, Lower - Left	(inc. 7-8 and 13)	
13	3313-107	4	Axle		
14	3313-832	2	Axle, Drive	(inc. 15-17)	
15	3313-560	2	Service Kit, Differential Side Boot (In Board)	(inc. 16)	
16	0423-845	2	Clip, Retaining - Inboard		
17	3306-425	2	Repair Kit, Boot - Drive Axle - Outbound		
18	3323-108	1	Knuckle - Assembly	(inc. 19-22)	Right
18	3323-109	1	Knuckle - Assembly	(inc. 19-22)	Left
19	1402-809	2	Bearing		
20	0423-423	2	Ring, Retaining		

Item	Part No.	Qty	Name	Context	Footnote
21	0403-283	8	Bushing, Suspension		
22	0403-437	4	Collar, Suspension Bushing		

SEAT ASSEMBLY [301363]

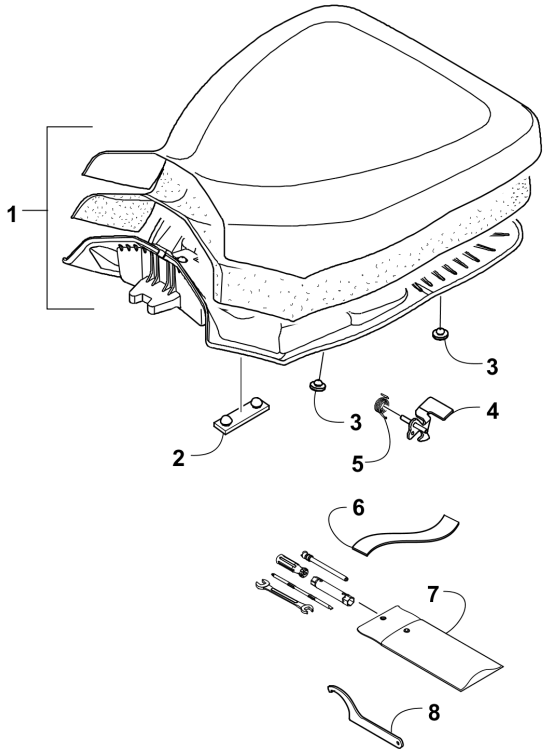

Item	Part No.	Qty	Name	Context	Footnote
1	3307-147	1	Seat Assembly	(inc. 2-5)	
2	3306-673	1	Bumper, Seat		
3	3306-458	6	Bumper, Seat		
4	1506-156	1	Latch, Seat		
5	1406-592	1	Spring, Latch		
6	3307-148	1	Retainer, Tool Kit		
7	3305-913	1	Kit, Tool		
8	1441-797	1	Wrench, Spanner		Optional

SECONDARY DRIVE ASSEMBLY [94327]

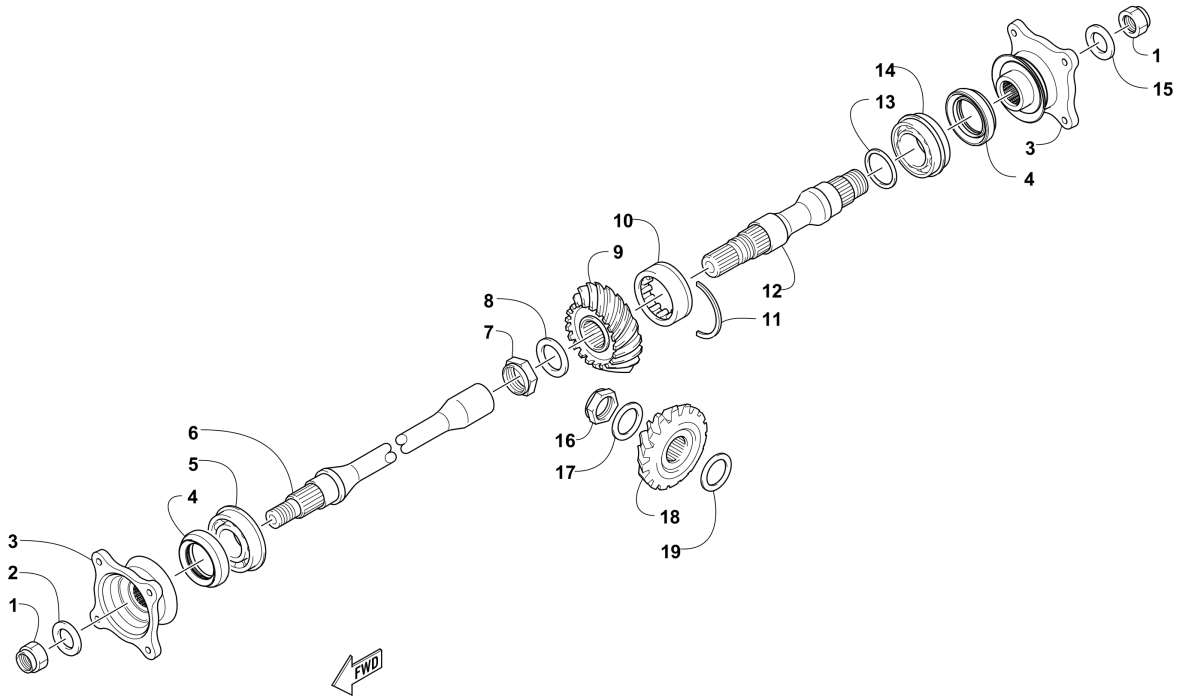

Item	Part No.	Qty	Name	Context	Footnote
1	3306-428	2	Nut		
2	3304-958	1	Washer		
3	0819-022	2	Flange, Output Joint		
4	0830-144	2	Seal, Oil		
5	0832-026	1	Bearing		
6	0819-020	1	Shaft, Secondary Driven		
7	0827-022	1	Nut		
8	0828-090	1	Washer		
9	0819-019	1	Gear, Secondary Driven		
10	0832-040	1	Bearing		
11	0819-070	1	C-Ring		
12	0819-021	1	Shaft, Secondary Driven		
13	3305-955	AR	Shim, 25 x 34 x 0.60 mm		
13	3305-956	AR	Shim, 25 x 34 x 0.65 mm		
13	3305-957	AR	Shim, 25 x 34 x 0.70 mm		
13	3305-958	AR	Shim, 25 x 34 x 0.75 mm		
13	3305-959	AR	Shim, 25 x 34 x 0.80 mm		
13	3305-960	AR	Shim, 25 x 34 x 0.85 mm		
13	3305-961	AR	Shim, 25 x 34 x 0.90 mm		
13	3305-962	AR	Shim, 25 x 34 x 0.95 mm		
13	3305-963	AR	Shim, 25 x 34 x 1.00 mm		
13	3305-964	AR	Shim, 25 x 34 x 1.05 mm		
13	3305-965	AR	Shim, 25 x 34 x 1.10 mm		

Item	Part No.	Qty	Name	Context	Footnote
13	0828-088	AR	Shim, 25 x 34 x 1.15 mm		
13	3305-966	AR	Shim, 25 x 34 x 1.20 mm		
13	3305-967	AR	Shim, 25 x 34 x 1.25 mm		
14	0832-041	1	Bearing		
15	3306-226	1	Washer		
16	0827-047	1	Nut		
17	3304-042	1	Washer, Thrust		
18	0819-018	1	Gear, Secondary Drive		
19	3306-009	AR	Shim, 30 x 48 x 0.60 mm		
19	3306-010	AR	Shim, 30 x 48 x 0.65 mm		
19	3306-011	AR	Shim, 30 x 48 x 0.70 mm		
19	3306-012	AR	Shim, 30 x 48 x 0.75 mm		
19	3306-013	AR	Shim, 30 x 48 x 0.80 mm		
19	3306-014	AR	Shim, 30 x 48 x 0.85 mm		
19	3306-015	AR	Shim, 30 x 48 x 0.90 mm		
19	3306-016	AR	Shim, 30 x 48 x 0.95 mm		
19	3306-017	AR	Shim, 30 x 48 x 1.00 mm		
19	3306-018	AR	Shim, 30 x 48 x 1.05 mm		
19	3306-019	AR	Shim, 30 x 48 x 1.10 mm		
19	3306-020	AR	Shim, 30 x 48 x 1.15 mm		
19	3306-021	AR	Shim, 30 x 48 x 1.20 mm		
19	3306-022	AR	Shim, 30 x 48 x 1.25 mm		

SECONDARY TRANSMISSION ASSEMBLY [301457]

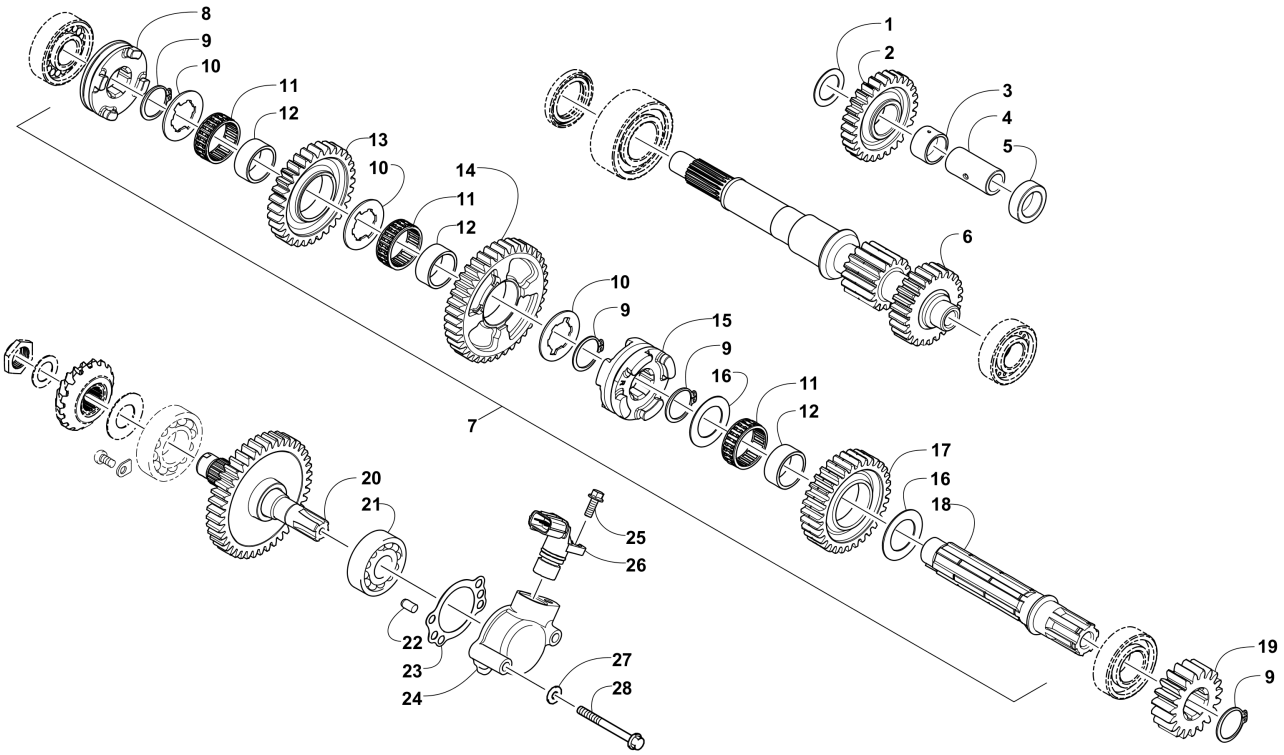

Item	Part No.	Qty	Name	Context	Footnote
1	0828-081	1	Washer, Thrust		
2	0822-061	1	Gear, Reverse Idle		
3	0822-065	1	Bushing		
4	0822-064	1	Shaft, Reverse Idle		
5	0822-029	1	Spacer		
6	0822-128	1	Driveshaft		
7	0822-129	1	Countershaft Assembly	(inc. 8-18)	
8	0822-033	1	Gear Select, Reverse		
9	3304-147	4	Circlip, External - 25 mm		
10	3304-045	3	Washer		
11	0832-038	3	Bearing		
12	0822-062	3	Bushing		
13	0822-032	1	Gear, Reverse Driven		
14	0822-063	1	Gear, Driven - Low		
15	0822-027	1	Gear Select, Sliding		
16	3304-044	2	Washer, Thrust - 25 mm		
17	0818-119	1	Gear, Driven - High		
18	0822-025	1	Countershaft		
19	0822-028	1	Gear, Drive		
20	0822-023	1	Shaft, Output		
21	3304-198	1	Bearing		
22	3303-395	2	Pin, Dowel		
23	0830-156	1	Gasket, Housing		

Item	Part No.	Qty	Name	Context	Footnote
24	0822-105	1	Housing, Speedometer Sensor		
25	3307-061	1	Screw, Cap		
26	3313-172	1	Sensor, Speedometer		
27	0830-155	2	Gasket		
28	3307-051	2	Screw, Cap		

SHIFT LEVER ASSEMBLY [301366]

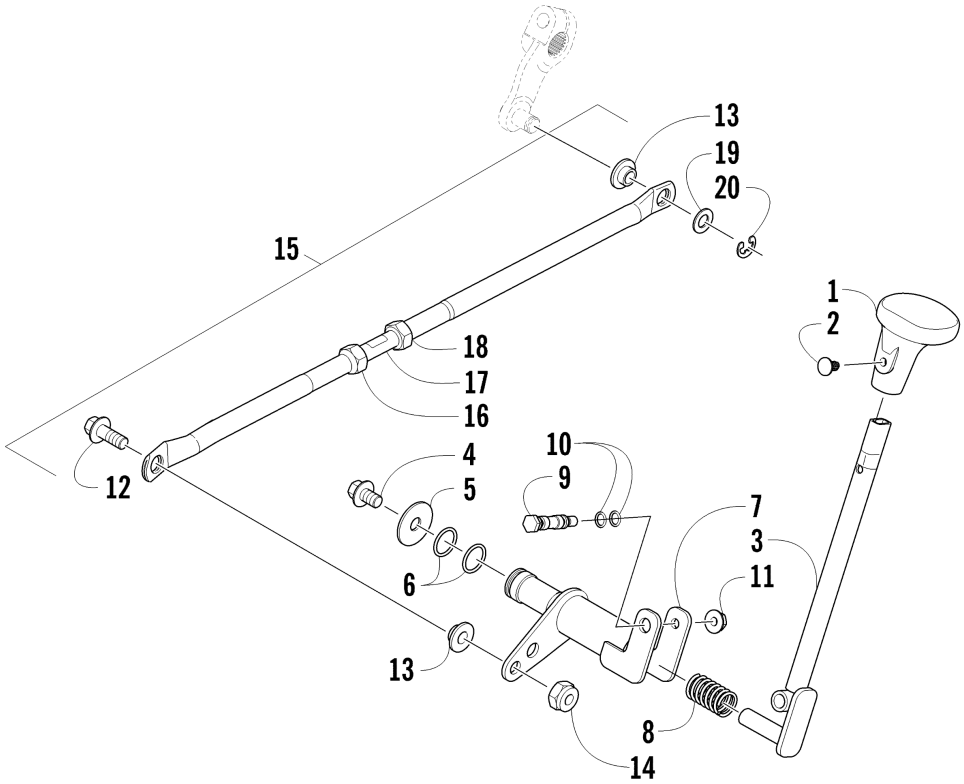

Item	Part No.	Qty	Name	Context	Footnote
1	0402-843	1	Knob, Shift		
2	0423-345	1	Clip, Push		
3	3307-170	1	Lever, Shift		
4	3304-544	1	Screw, Cap		
5	0423-087	1	Washer		
6	0423-299	2	O-Ring - 016 (5/8 x 3/4 x 1/16)		
7	3306-317	1	Actuator, Shift		
8	0402-678	1	Spring, Shift Lever		
9	0402-675	1	Axle, Pivot		
10	0423-182	2	O-Ring		
11	3304-654	1	Nut, Flange - 6 mm		
12	3313-821	1	Screw, Cap		
13	3323-037	2	Bushing		
14	3305-396	1	Nut, Lock		
15	3306-319	1	Linkage, Shift - Assembly	(inc. 16-18)	
16	3303-327	1	Nut, Hex - Right-Hand Thread		
17	3313-278	1	Adjuster, Shift Linkage		
18	3313-822	1	Nut, Hex - Left-Hand Thread		
19	3304-138	1	Washer		
20	3313-766	1	E-Ring		

STARTER CLUTCH ASSEMBLY [92888]

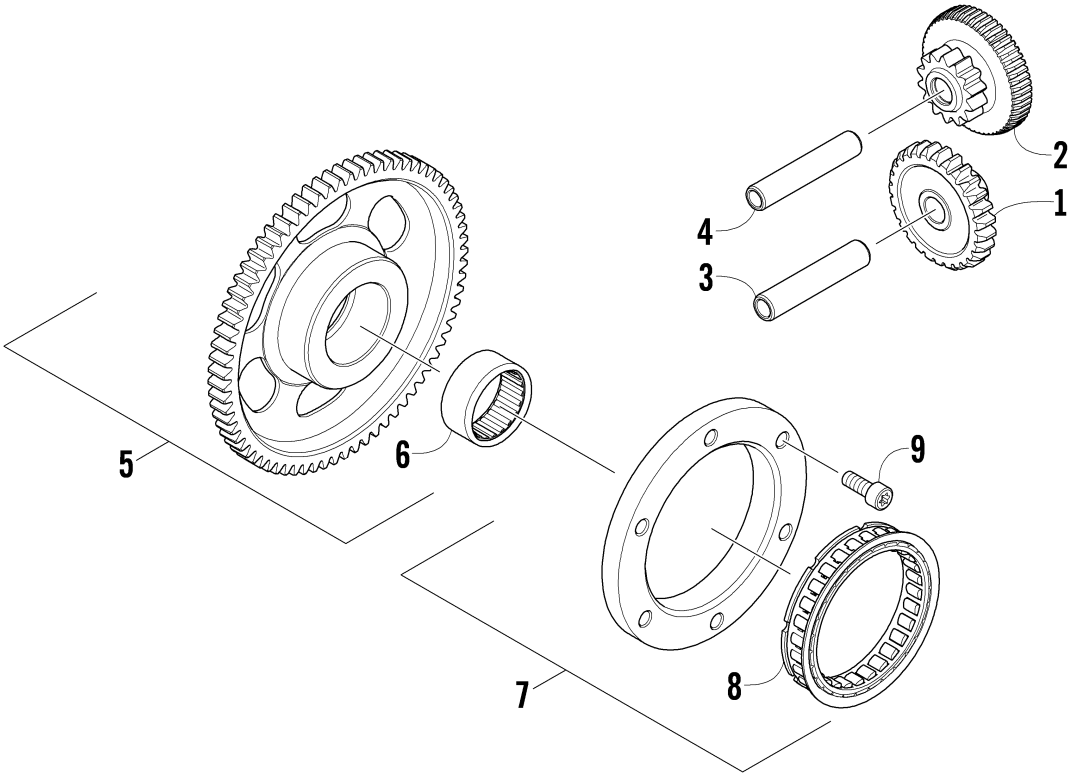

Item	Part No.	Qty	Name	Context	Footnote
1	0815-022	1	Gear, Starter Idler - No. 2		
2	0815-031	1	Gear, Starter Idler - No. 1		
3	0815-015	1	Pin, Starter Idler Gear No. 2		
4	0815-007	1	Pin, Starter Idler Gear No. 1		
5	0815-023	1	Gear, Starter Clutch	(inc. 6)	
6	0832-069	1	Bearing		
7	0802-044	1	Clutch, One-Way w/Hub - Assembly	(inc. 8)	
8		1	Bearing		Not a Service Part
9	0826-120	6	Screw, Cap		

STEERING ASSEMBLY [300466]

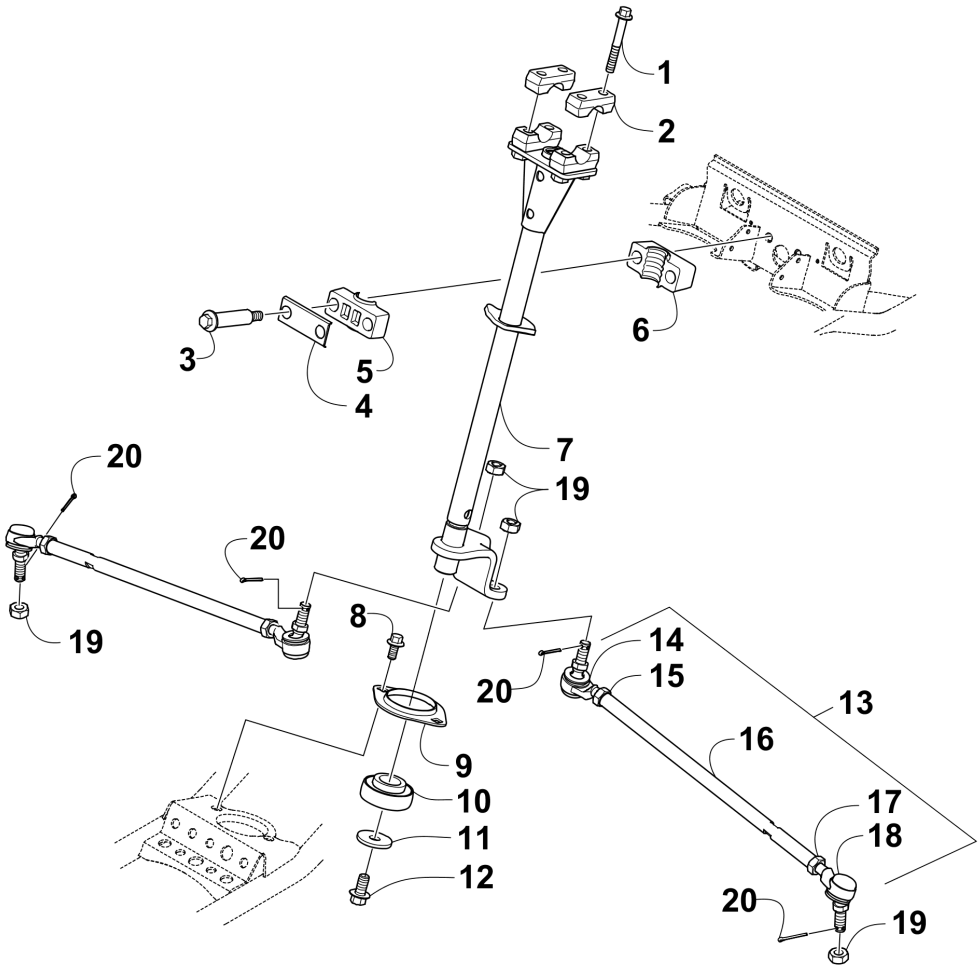

Item	Part No.	Qty	Name	Context	Footnote
1	3307-066	4	Screw, Cap		
2	0405-035	2	Cap, Steering Adjuster		
3	0423-505	2	Screw, Shoulder		
4	0405-166	1	Cap, Housing		
5	3323-052	1	Block, Mounting	Front	
6	3323-051	1	Block, Mounting	Rear	
7	3313-056	1	Post, Steering		
8	3304-565	2	Bolt, Flange - 8 x 20		
9	0602-233	1	Flange, Bearing		
10	0405-052	1	Bearing w/Inverted Oil Seal		
11	0423-073	1	Washer		
12	8408-820	1	Screw, Cap		
13	3306-722	2	Tie Rod - Assembly	(inc. 14-18)	
14	3306-725	2	End, Tie Rod - Left-Hand Thread		
15	3306-727	2	Nut - Left-Hand Thread		
16	3306-723	2	Tie Rod		
17	3306-726	2	Nut - Right-Hand Thread		
18	3306-724	2	End, Tie Rod - Right-Hand Thread		
19	3306-290	4	Nut		

Item	Part No.	Qty	Name	Context	Footnote
20	3305-724	4	Pin, Cotter		

THROTTLE BODY ASSEMBLY [300570]

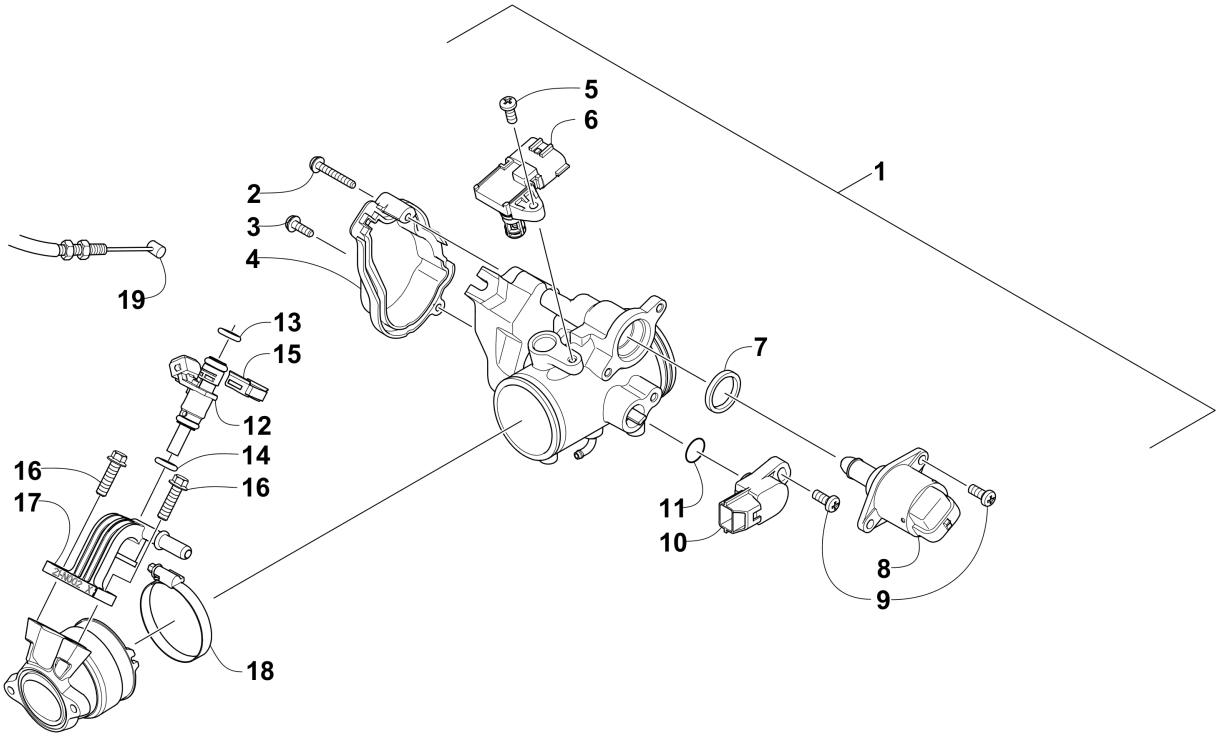

Item	Part No.	Qty	Name	Context	Footnote
1	0570-328	1	Throttle Body - Assembly	(inc. 2-11)	
2	3306-267	1	Screw, Machine		
3	3306-266	1	Screw, Machine		
4	0824-060	1	Cover		
5	0835-007	1	Screw, Machine		
6	0824-052	1	Sensor, T-MAP		
7	0832-088	1	Seal		
8	0824-054	1	Valve, Bypass - Idle Air		
9	3305-953	3	Screw, Machine		
10	0824-053	1	Sensor, Throttle Position	(inc. 11)	
11	3306-150	1	O-Ring		
12	3306-251	1	Injector, Fuel		
13	3307-074	1	O-Ring - A		
14	3307-075	1	O-Ring - B		
15	3306-253	1	Clip, Retaining		
16	3305-344	2	Screw, Cap		
17	3307-073	1	Rail, Fuel		
18	3306-250	1	Clamp		
19	3306-275	1	Cable, Throttle		

TRANSMISSION ASSEMBLY [301456]

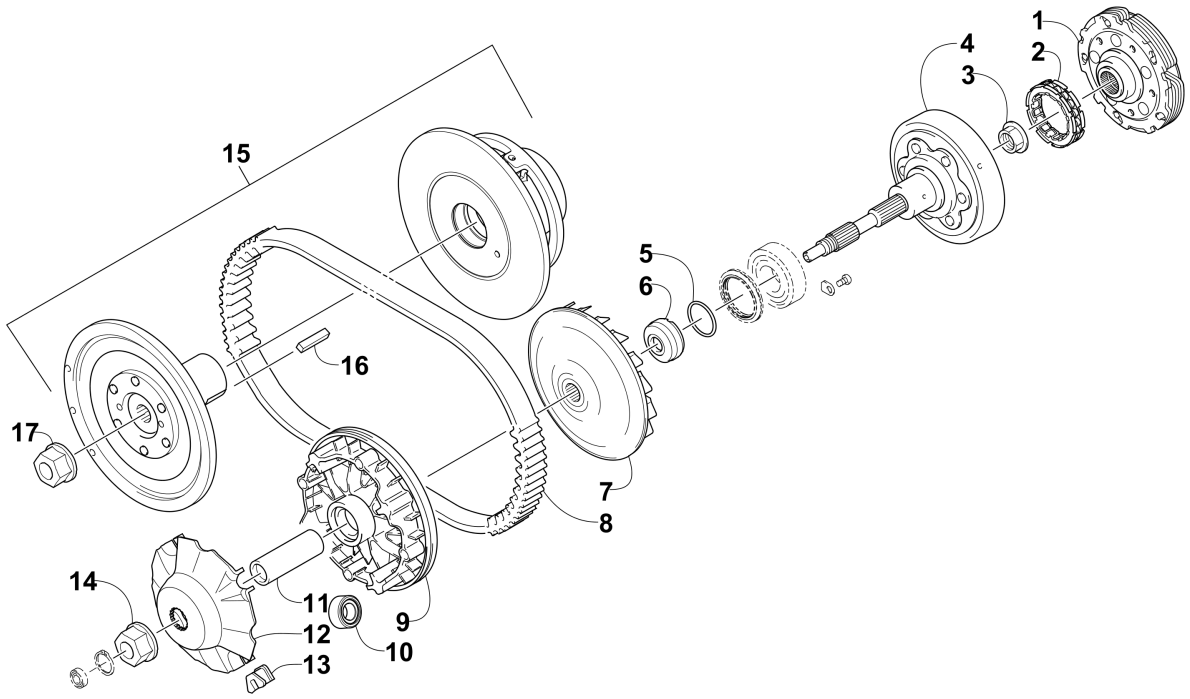

Item	Part No.	Qty	Name	Context	Footnote
1	0823-328	1	Shoe, Clutch - Assembly		
2	0823-198	1	Clutch, One-Way		
3	0827-050	1	Nut		
4	0823-338	1	Housing, Clutch		
5	0730-187	1	Bracket, Mounting - Taillight - Green		
6	0823-058	1	Spacer		
7	0823-313	1	Face, Fixed Drive		
8	0823-228	1	Belt, Drive		
9	0823-324	1	Face, Movable Drive		
10	0823-351	8	Roller, Movable Drive Face		
11	0823-206	1	Spacer, Movable Drive Face		
12	0823-213	1	Plate, Movable Drive Face		
13	0823-214	4	Damper, Movable Drive Face		
14	3323-165	1	Nut, Flange - 16 mm		
15	0823-350	1	Clutch, Driven - Assembly	(inc. 16)	
16	0835-018	1	Key		
17	0827-058	1	Nut		

WATER PUMP ASSEMBLY [301459]

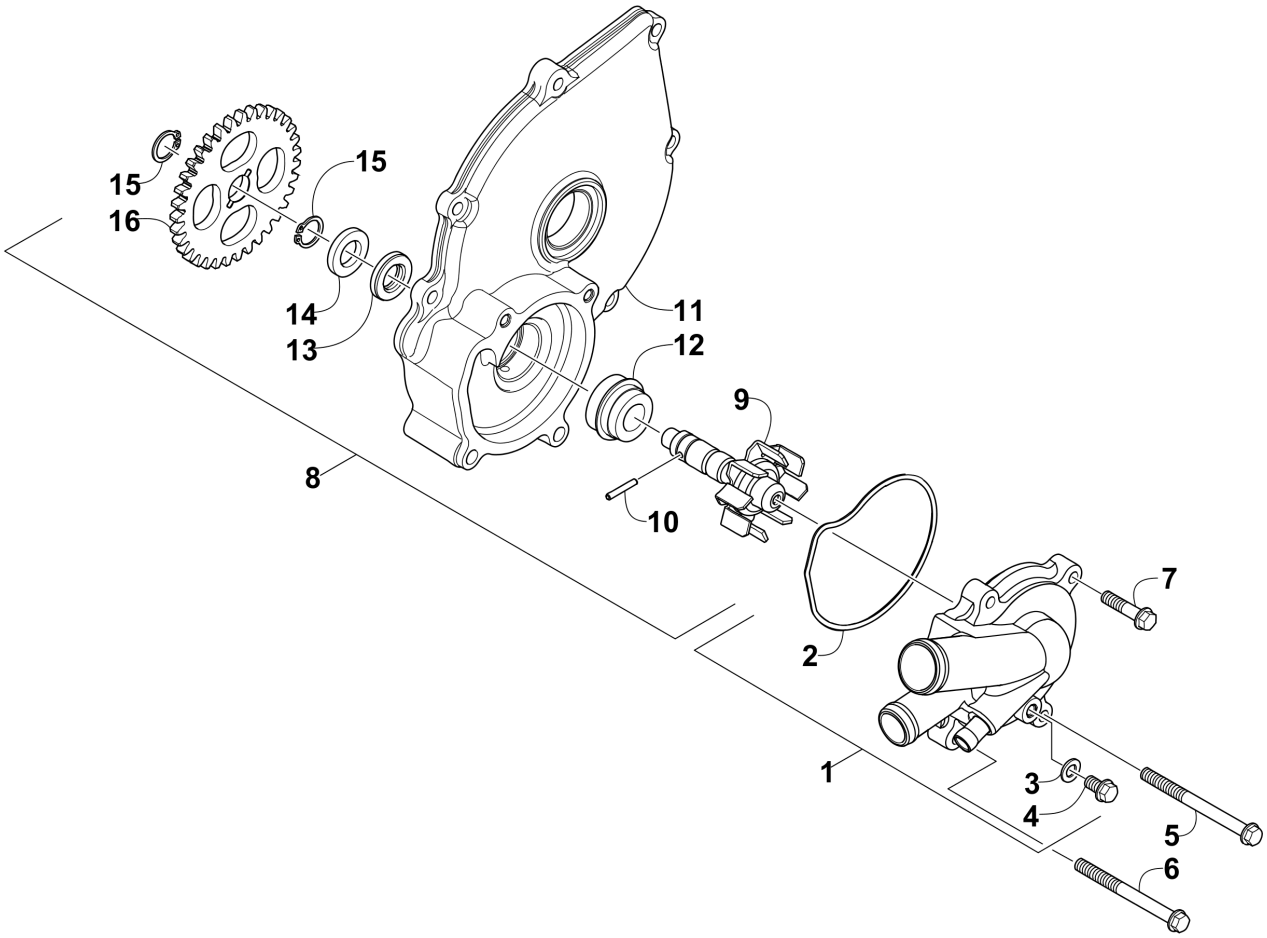

Item	Part No.	Qty	Name	Context	Footnote
1	0813-054	1	Cover, Water Pump - Assembly	(inc. 2-4)	
2	0830-208	1	O-Ring		
3	3304-049	1	Washer		
4	3304-186	1	Screw, Cap		
5	3307-052	1	Screw, Cap		
6	0826-151	1	Screw, Cap		
7	3307-050	2	Screw, Cap		
8	0813-051	1	Housing, Water Pump - Assembly	(inc. 9-16)	
9	0813-057	1	Shaft, Impeller - Assembly		
10	0829-057	1	Pin, Alignment		
11	0806-123	1	Housing, Water Pump		
12	3305-940	1	Seal, Mechanical		
13	0830-207	1	Seal, Oil		
14	0828-130	1	Washer, Thrust		
15	0831-089	2	Circlip		
16	0811-037	1	Gear, Driven		

WHEEL AND TIRE ASSEMBLY [301446]

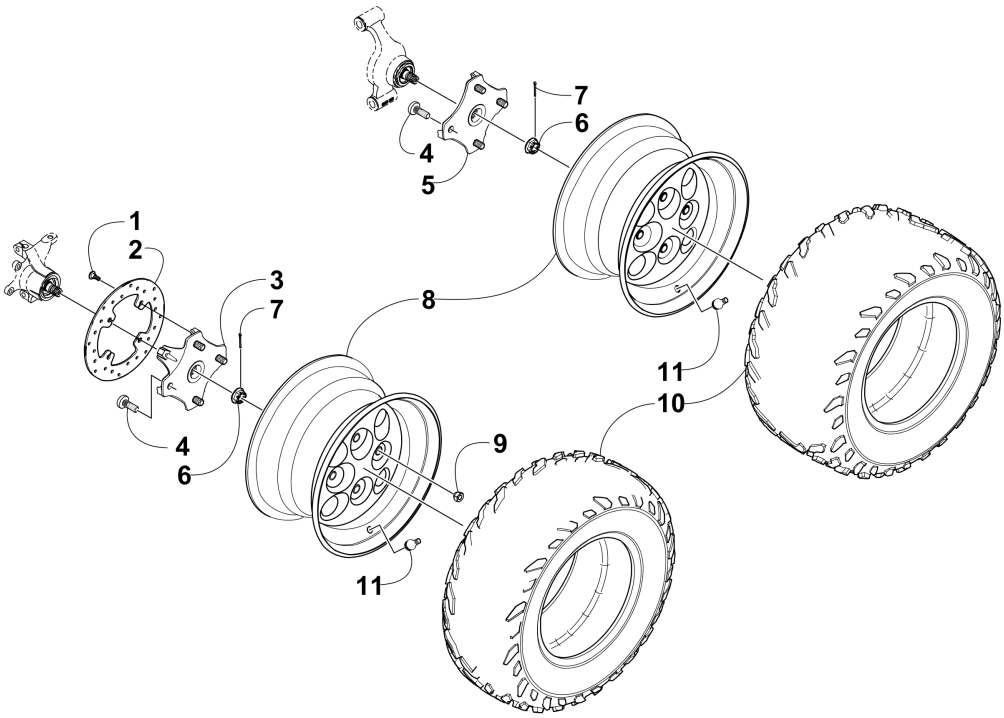

Item	Part No.	Qty	Name	Context	Footnote
1	0423-557	12	Screw, Shoulder		
2	3323-097	3	Disc, Brake		
3	1502-462	2	Hub, Wheel	(inc. 4)	
4	0402-974	16	Stud		
5	1502-462	1	Hub, Wheel	(inc. 4)	
5	1502-464	1	Hub, Wheel	(inc. 4)	
6	0423-607	4	Nut, Castle		
7	0423-407	4	Pin, Cotter		
8	3306-868	4	Wheel - Black		
9	0423-408	16	Nut, Lug		
10	1402-360	2	Tire		
10	1402-361	2	Tire		
11	3303-887	4	Stem, Valve		

WIRING HARNESS ASSEMBLY [301449]

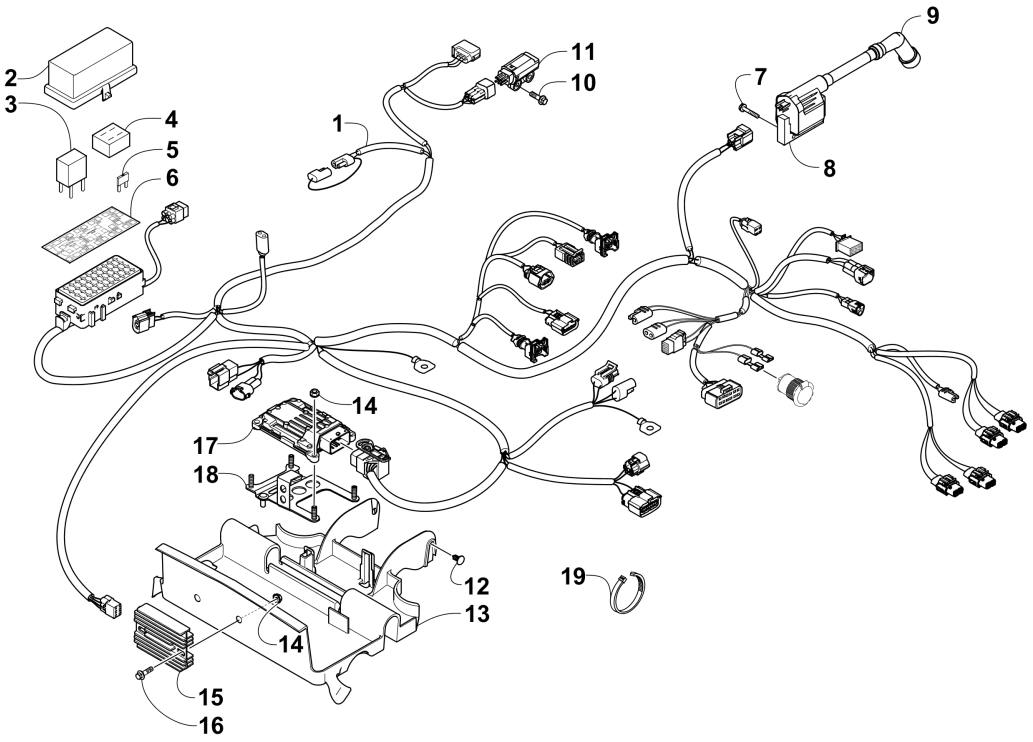

Item	Part No.	Qty	Name	Context	Footnote
1	3307-193	1	Harness, Main	(inc. 2-6)	
2	0530-008	1	Cover, Fuse Block		
3	0430-033	3	Relay (5-Pin) - 30 Amp	(5-Pin) - 30 Amp	
4	0430-037	1	Holder, Fuse		
5	0430-032	7	Fuse - 10 Amp		
5	0430-031	4	Fuse - 15 Amp		
5	3304-212	1	Fuse - 30 Amp		
6	3306-816	1	Decal, Fuse Block		
7	3306-326	2	Screw, Cap		
8	0824-073	1	Coil, Ignition - Assembly (w/Cap)	(inc. 9)	
9	0824-056	1	Cap, Spark Plug		
10	3306-327	2	Screw, Cap		
11	3306-325	1	Sensor, Tilt		
12	0423-345	2	Clip, Push		
13	3306-281	1	Tray, Electrical		
14	3304-654	6	Nut, Flange - 6 mm		
15	3306-413	1	Regulator, Voltage		
16	3305-344	2	Screw, Cap		
17	0530-168	1	ECM		
18	3306-304	1	Bracket, Mounting - ECM		
19	3303-289	AR	Cable Tie		

The illustrations used in this Parts Manual are for reference to replacement part numbers only and are not to be used for assembly. For assembly procedures, use an Arctic Cat Service Manual. For a complete list of related items, refer to the current accessory catalog. Once printed, Arctic Cat does not guarantee the accuracy of the information contained in this manual. Our parts lists and illustrations are constantly revised to reflect part number changes, discrepancies, and enhancements.

®™ Trademarks of Arctic Cat Inc., Thief River Falls, MN 56701